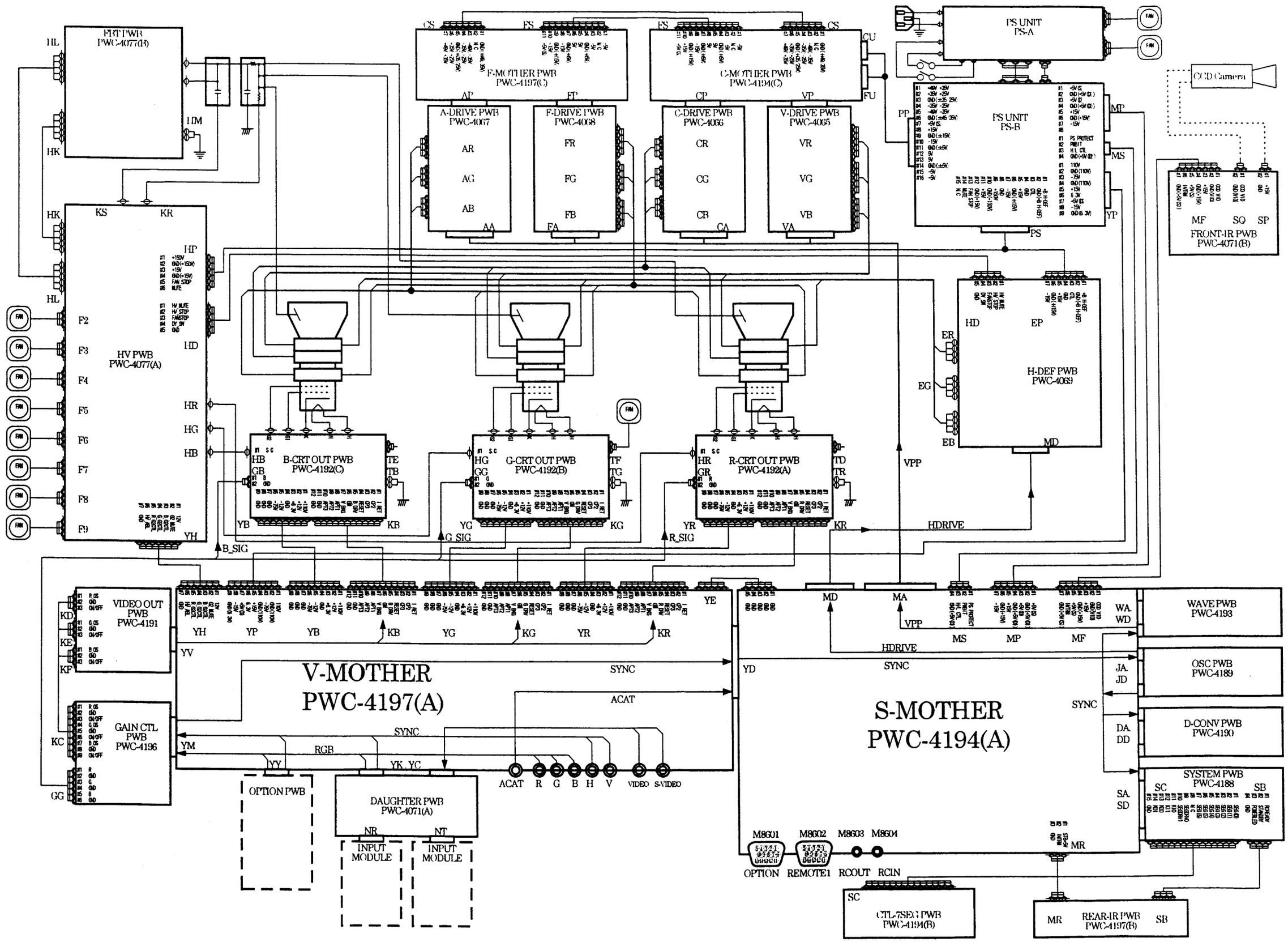
FIST PWB
PWC-4077(B)
F-MOTHER PWB
PWC-4197(C)
C-MOTHER PWB
PWC-4194(C)
PS UNIT
PS-A
PS UNIT
PS-B
CCD Camera
A-DRIVE PWB
PWC-4067
F-DRIVE PWB
PWC-4068
C-DRIVE PWB
PWC-4066
V-DRIVE PWB
PWC-4065
FRONT-IR PWB
PWC-4071(B)
HV PWB
PWC-4077(A)
H-DEF PWB
PWC-4069
B-CRT OUT PWB
PWC-4192(C)
G-CRT OUT PWB
PWC-4192(B)
R-CRT OUT PWB
PWC-4192(A)
B_SIG
G_SIG
R_SIG
HDRIVE
VPP
VIDEO OUT
PWB
PWC-4191
GAIN CTL
PWB
PWC-4196
V-MOTHER
PWC-4197(A)
S-MOTHER
PWC-4194(A)
WAVE PWB
PWC-4193
OSC PWB
PWC-4189
D-CONV PWB
PWC-4190
SYSTEM PWB
PWC-4188
OPTION PWB
DAUGHTER PWB
PWC-4071(A)
INPUT
MODULE
INPUT
MODULE
ACAT
R
G
B
H
V
VIDEO
S-VIDEO
SYNC
RGB
ACAT
M8601
M8602
M8603
M8604
OPTION
REMOTE1
RCOUT
RCIN
CTL-7SEG PWB
PWC-4194(B)
REAR-IR PWB
PWC-4197(B)

SCHEMATIC DIAGRAMS

RGB IN PWB (PWC-4118)

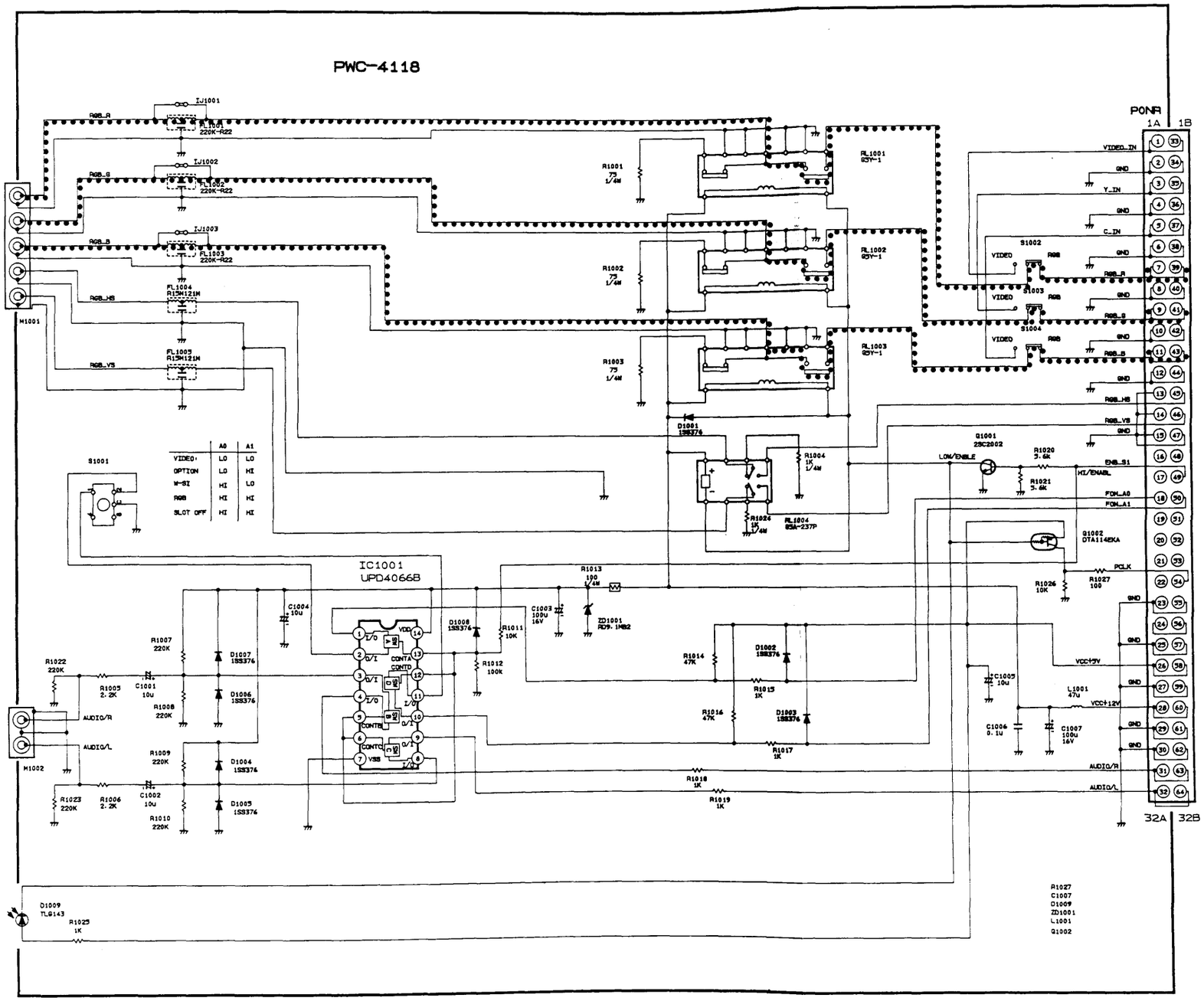

NOTES

1. RESISTOR VALUES ARE IN Ω (OHM) K=1.000Ω M=1.000.000Ω
2. ALL RESISTORS ARE 1/10W EXCEPT WHERE OTHERWISE INDICATED.
3. CAPACITOR VALUES ARE IN μF UNLESS OTHERWISE INDICATED. P=PF
4. ALL CAPACITORS ARE 50VOLTS EXCEPT WHERE OTHERWISE INDICATED.
5. VOLTAGES AND WAVEFORMS MEASURED UNDER FOLLOWING CONDITIONS.
   INPUT SIGNAL IS STANDARD COLOR BAR CONTRAST CONTROL IS 75% AND CONTROL EXCEPT CONTRAST ARE CENTER.
6. Ⓗ..... HORIZONTAL RATE. Ⓥ..... VERTICAL RATE.

WARNING

REPLACEMENT PARTS WHICH HAVE SPECIAL SAFTY CHARACTERISTICS ARE IDENTIFIED BY ⚠ SHADING ON THE SCHEMATICS.
REPLACE THESE CRITICAL COMPONENTS WITH RECOMMENDED REPLACEMENT PARTS.
DON'T DEGRADE THE SAFETY OF THE SET THROUGH IMPROPER SERVICING.

VID IN PWB (PWC-4119)

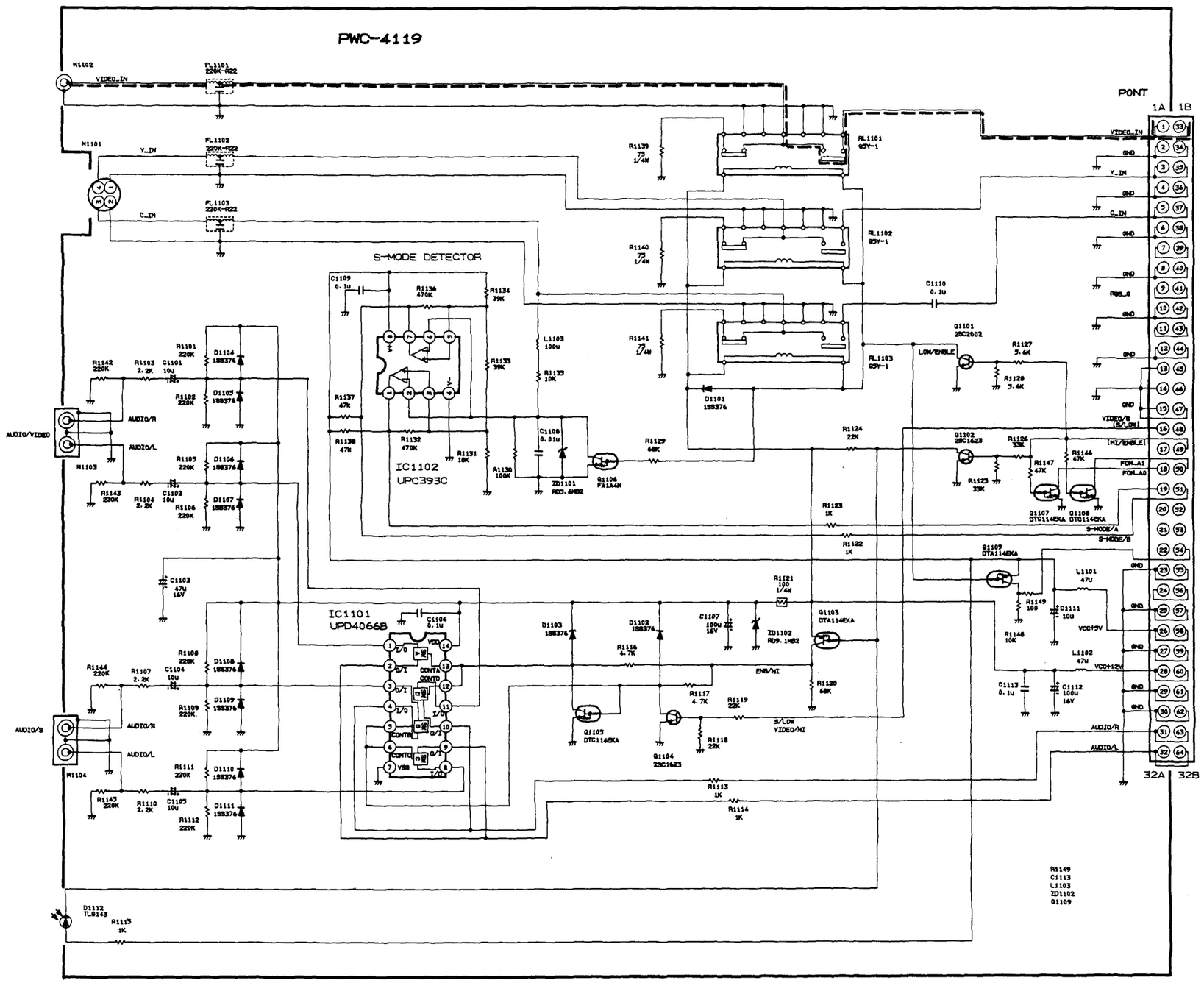

NOTES

1. *RESISTOR VALUES ARE IN Ω (OHM) K=1.000Ω M=1.000.000Ω*
2. ALL RESISTORS ARE 1/10W EXCEPT WHERE OTHERWISE INDICATED.
3. CAPACITOR VALUES ARE IN μF UNLESS OTHERWISE INDICATED. P=PF
4. ALL CAPACITORS ARE 50VOLTS EXCEPT WHERE OTHERWISE INDICATED.
5. VOLTAGES AND WAVEFORMS MEASURED UNDER FOLLOWING CONDITIONS.
   INPUT SIGNAL IS STANDARD COLOR BAR CONTRAST CONTROL IS 75% AND CONTROL EXCEPT CONTRAST ARE CENTER.
6. Ⓗ..... HORIZONTAL RATE. Ⓥ..... VERTICAL RATE.

WARNING

REPLACEMENT PARTS WHICH HAVE SPECIAL SAFTY CHARACTERISTICS ARE IDENTIFIED BY ⚠ SHADING ON THE SCHEMATICS.
REPLACE THESE CRITICAL COMPONENTS WITH RECOMMENDED REPLACEMENT PARTS.
DON'T DEGRADE THE SAFETY OF THE SET THROUGH IMPROPER SERVICING.

D. T. PWB (PWC-4071 (A)) (1/6)

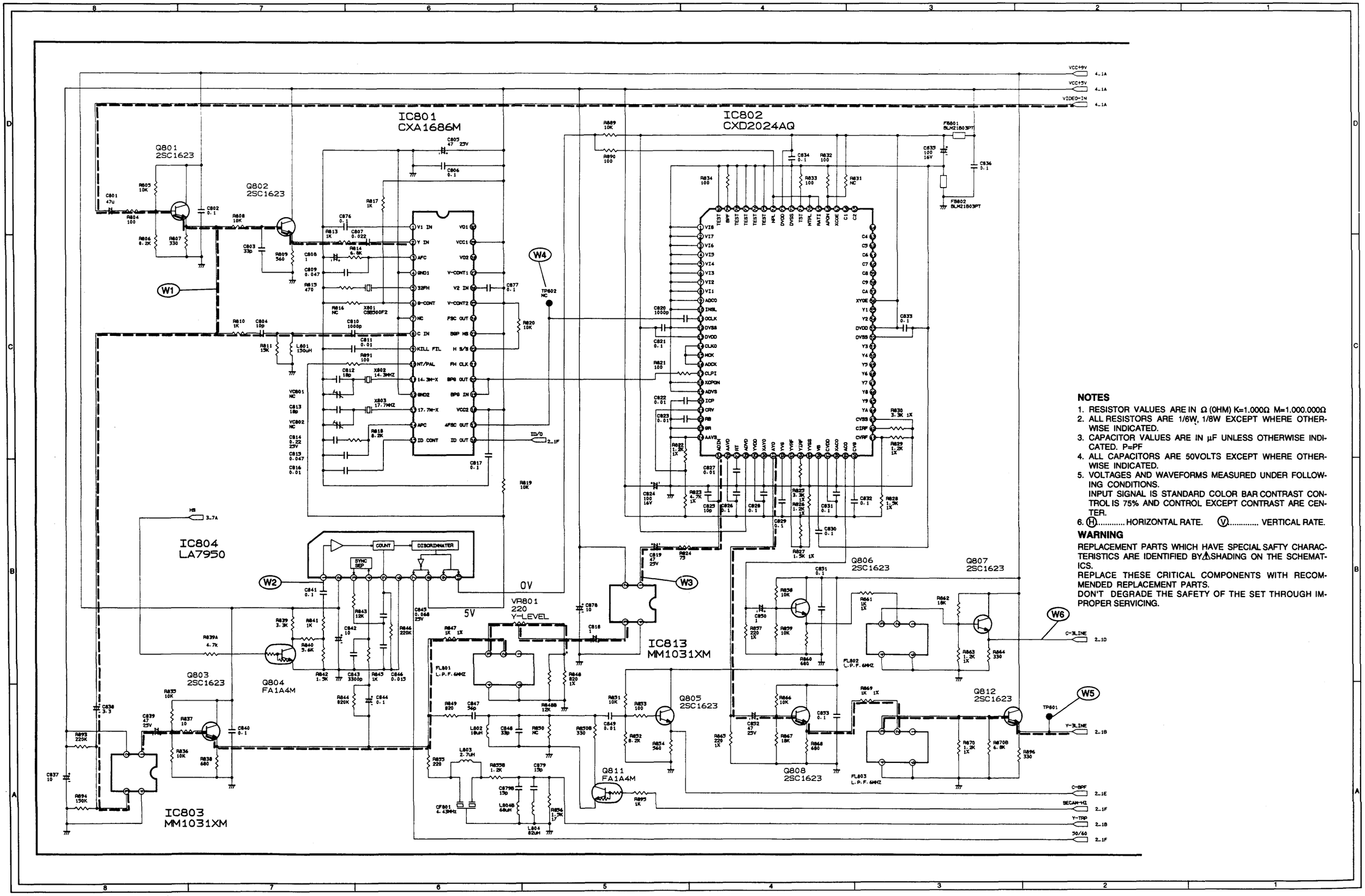

NOTES

1. RESISTOR VALUES ARE IN Ω (OHM) K=1.000Ω M=1.000.000Ω
2. ALL RESISTORS ARE 1/6W, 1/8W EXCEPT WHERE OTHERWISE INDICATED.
3. CAPACITOR VALUES ARE IN μF UNLESS OTHERWISE INDICATED. P=PF
4. ALL CAPACITORS ARE 50VOLTS EXCEPT WHERE OTHERWISE INDICATED.
5. VOLTAGES AND WAVEFORMS MEASURED UNDER FOLLOWING CONDITIONS.
   INPUT SIGNAL IS STANDARD COLOR BAR CONTRAST CONTROL IS 75% AND CONTROL EXCEPT CONTRAST ARE CENTER.
6. Ⓗ..... HORIZONTAL RATE. Ⓥ..... VERTICAL RATE.

WARNING

REPLACEMENT PARTS WHICH HAVE SPECIAL SAFTY CHARACTERISTICS ARE IDENTIFIED BY⚠SHADING ON THE SCHEMATICS.
REPLACE THESE CRITICAL COMPONENTS WITH RECOMMENDED REPLACEMENT PARTS.
DON'T DEGRADE THE SAFETY OF THE SET THROUGH IMPROPER SERVICING.

D. T. PWB (PWC-4071 (A)) (2/6)

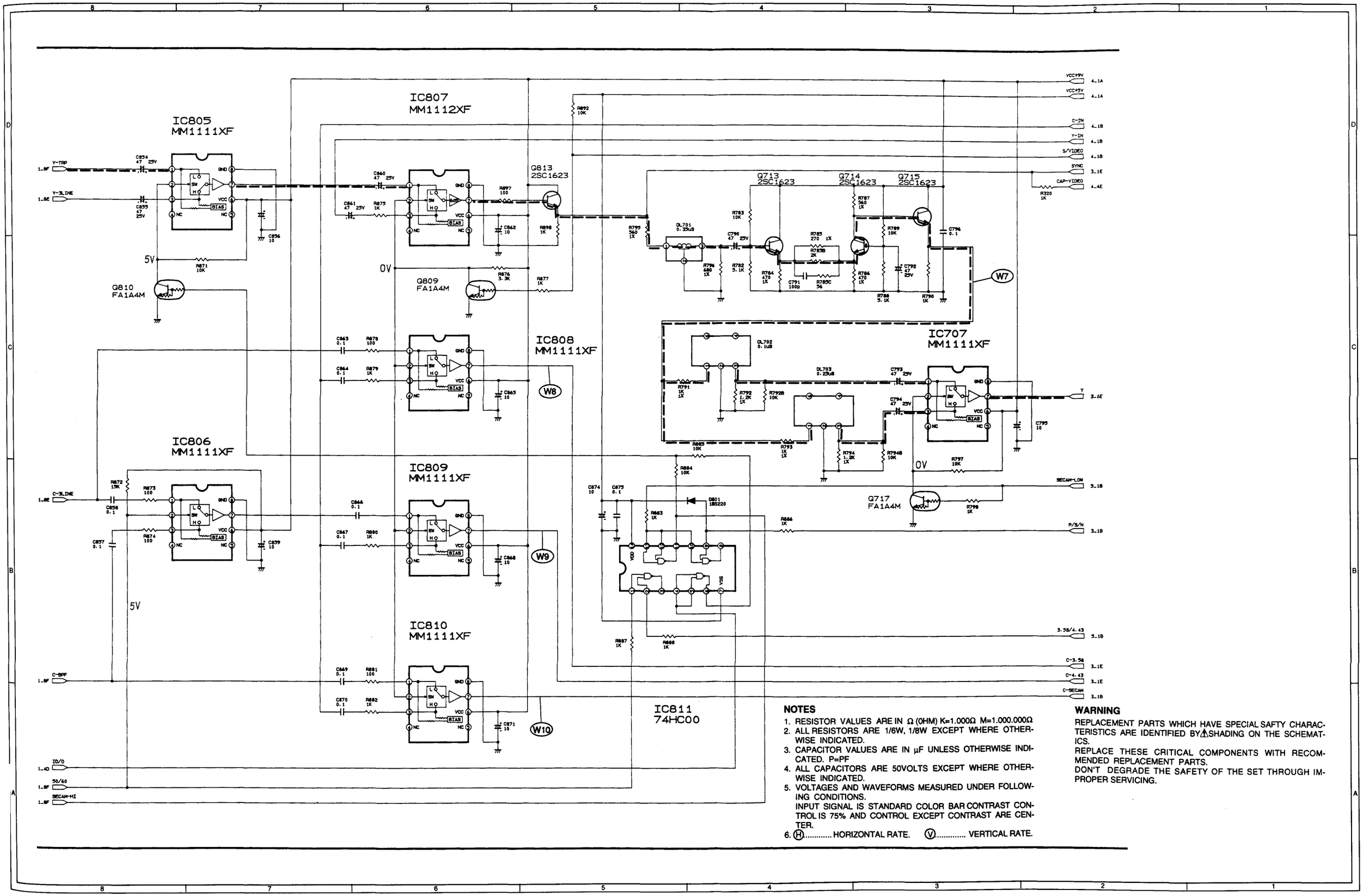

NOTES

1. RESISTOR VALUES ARE IN Ω (OHM) K=1.000Ω M=1.000.000Ω
2. ALL RESISTORS ARE 1/6W, 1/8W EXCEPT WHERE OTHERWISE INDICATED.
3. CAPACITOR VALUES ARE IN μF UNLESS OTHERWISE INDICATED. P=PF
4. ALL CAPACITORS ARE 50VOLTS EXCEPT WHERE OTHERWISE INDICATED.
5. VOLTAGES AND WAVEFORMS MEASURED UNDER FOLLOWING CONDITIONS.
   INPUT SIGNAL IS STANDARD COLOR BAR CONTRAST CONTROL IS 75% AND CONTROL EXCEPT CONTRAST ARE CENTER.
6. Ⓗ..... HORIZONTAL RATE. Ⓥ..... VERTICAL RATE.

WARNING

REPLACEMENT PARTS WHICH HAVE SPECIAL SAFTY CHARACTERISTICS ARE IDENTIFIED BY⚠SHADING ON THE SCHEMATICS.
REPLACE THESE CRITICAL COMPONENTS WITH RECOMMENDED REPLACEMENT PARTS.
DON'T DEGRADE THE SAFETY OF THE SET THROUGH IMPROPER SERVICING.

D. T. PWB (PWC-4071 (A)) (3/6)

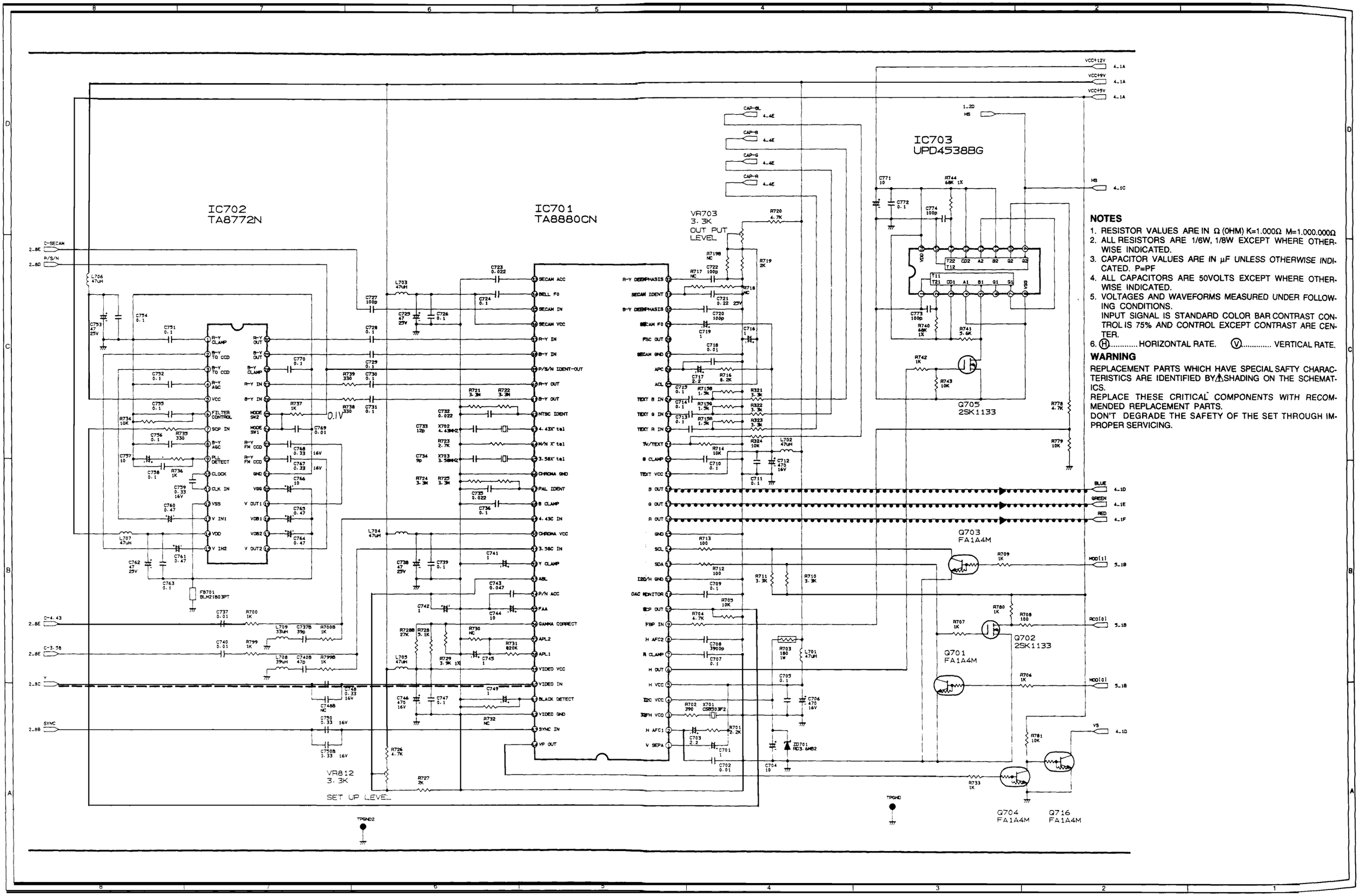

D. T. PWB (PWC-4071 (A)) (4/6)

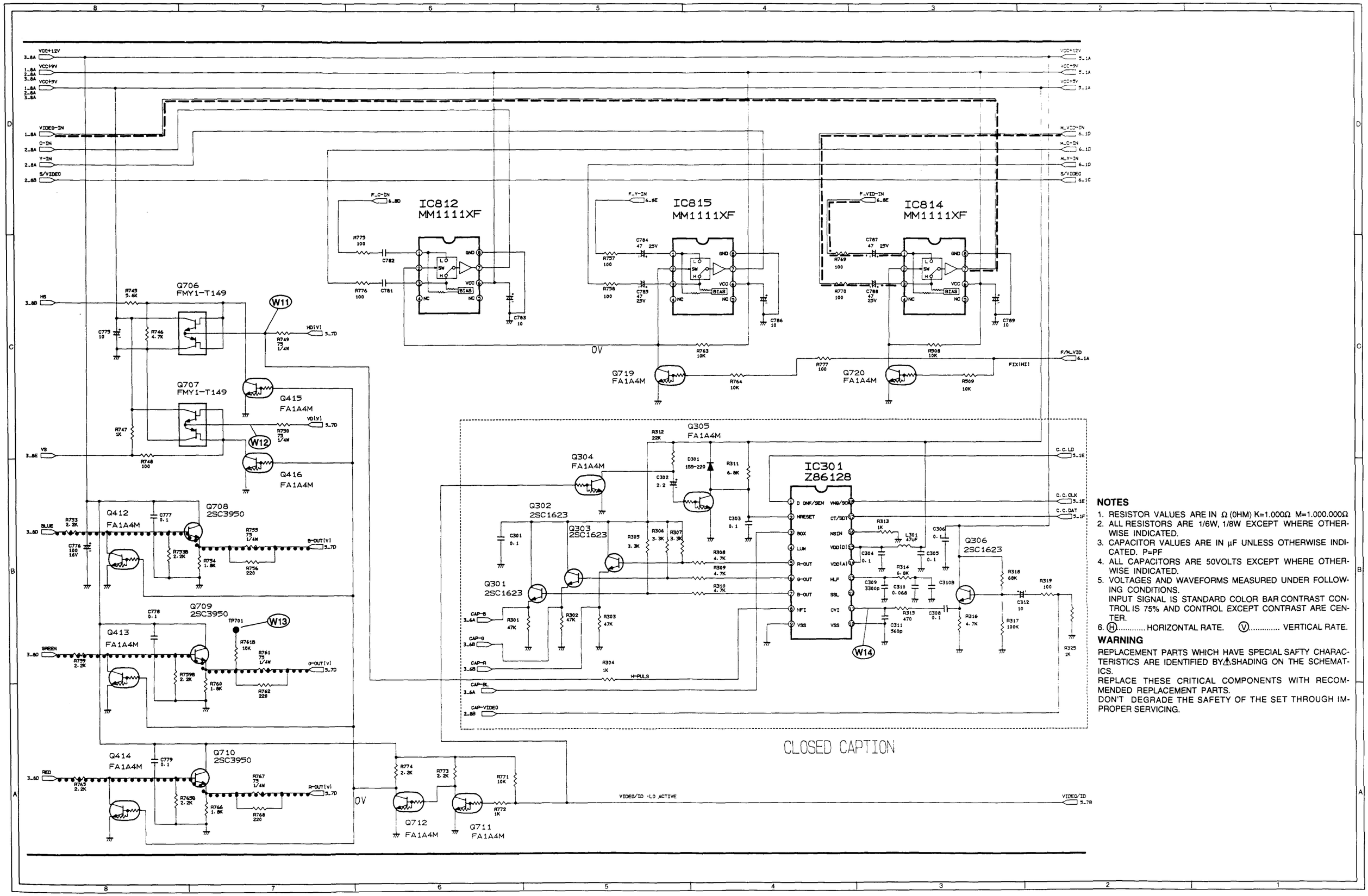

NOTES

1. RESISTOR VALUES ARE IN Ω (OHM) K=1.000Ω M=1.000.000Ω
2. ALL RESISTORS ARE 1/6W, 1/8W EXCEPT WHERE OTHERWISE INDICATED.
3. CAPACITOR VALUES ARE IN μF UNLESS OTHERWISE INDICATED. P=PF
4. ALL CAPACITORS ARE 50VOLTS EXCEPT WHERE OTHERWISE INDICATED.
5. VOLTAGES AND WAVEFORMS MEASURED UNDER FOLLOWING CONDITIONS.
   INPUT SIGNAL IS STANDARD COLOR BAR CONTRAST CONTROL IS 75% AND CONTROL EXCEPT CONTRAST ARE CENTER.
6. Ⓗ..... HORIZONTAL RATE. Ⓥ..... VERTICAL RATE.

WARNING

REPLACEMENT PARTS WHICH HAVE SPECIAL SAFTY CHARACTERISTICS ARE IDENTIFIED BY ⚠ SHADING ON THE SCHEMATICS.
REPLACE THESE CRITICAL COMPONENTS WITH RECOMMENDED REPLACEMENT PARTS.
DON'T DEGRADE THE SAFETY OF THE SET THROUGH IMPROPER SERVICING.

D. T. PWB (PWC-4071 (A)) (5/6)

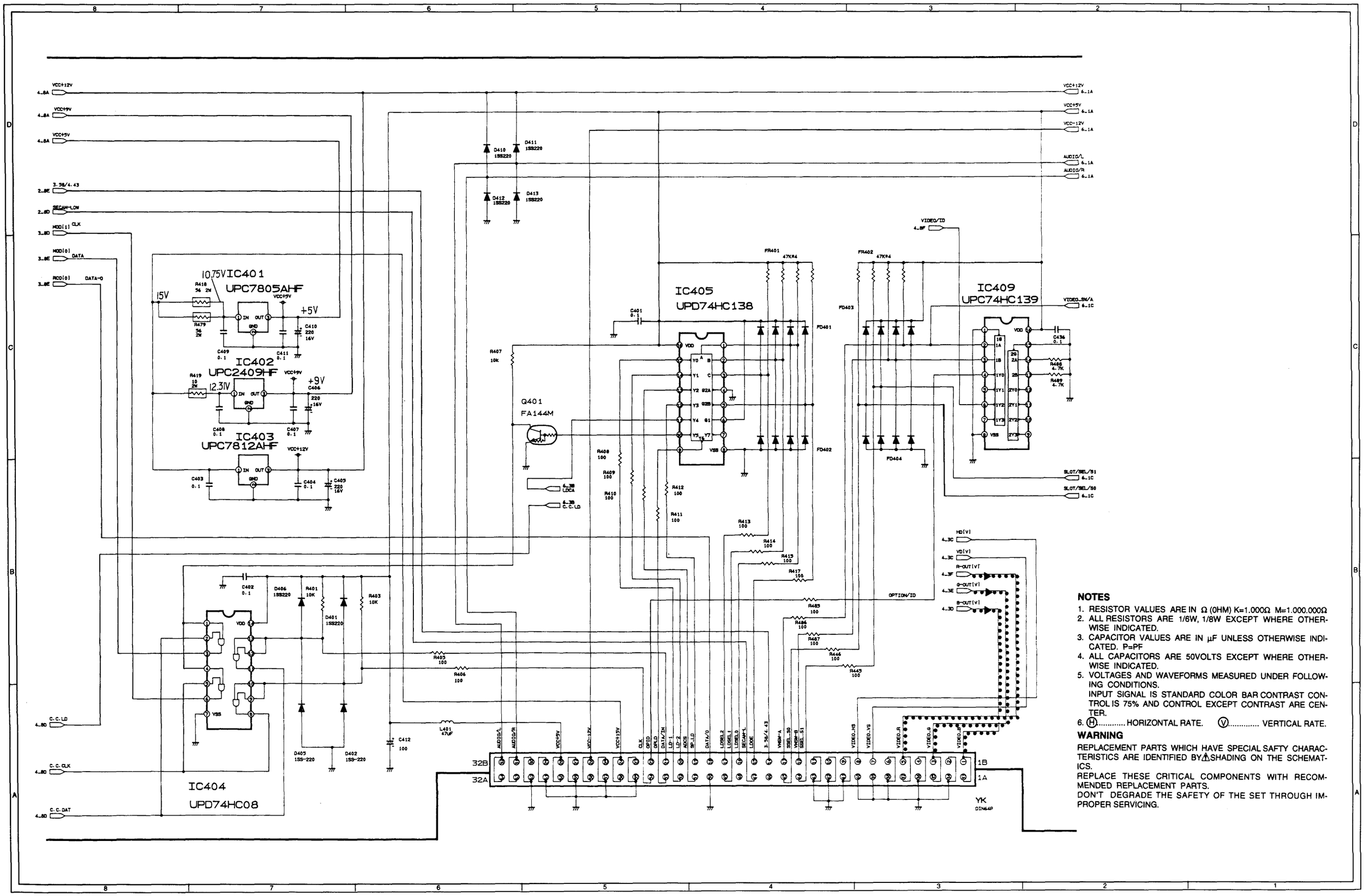

NOTES

1. RESISTOR VALUES ARE IN Ω (OHM) K=1.000Ω M=1.000.000Ω
2. ALL RESISTORS ARE 1/6W, 1/8W EXCEPT WHERE OTHERWISE INDICATED.
3. CAPACITOR VALUES ARE IN μF UNLESS OTHERWISE INDICATED. P=PF
4. ALL CAPACITORS ARE 50VOLTS EXCEPT WHERE OTHERWISE INDICATED.
5. VOLTAGES AND WAVEFORMS MEASURED UNDER FOLLOWING CONDITIONS.
   INPUT SIGNAL IS STANDARD COLOR BAR CONTRAST CONTROL IS 75% AND CONTROL EXCEPT CONTRAST ARE CENTER.
6. Ⓗ..... HORIZONTAL RATE. Ⓥ..... VERTICAL RATE.

WARNING

REPLACEMENT PARTS WHICH HAVE SPECIAL SAFTY CHARACTERISTICS ARE IDENTIFIED BY ⚠ SHADING ON THE SCHEMATICS.
REPLACE THESE CRITICAL COMPONENTS WITH RECOMMENDED REPLACEMENT PARTS.
DON'T DEGRADE THE SAFETY OF THE SET THROUGH IMPROPER SERVICING.

D. T. PWB (PWC-4071 (A)) (6/6)

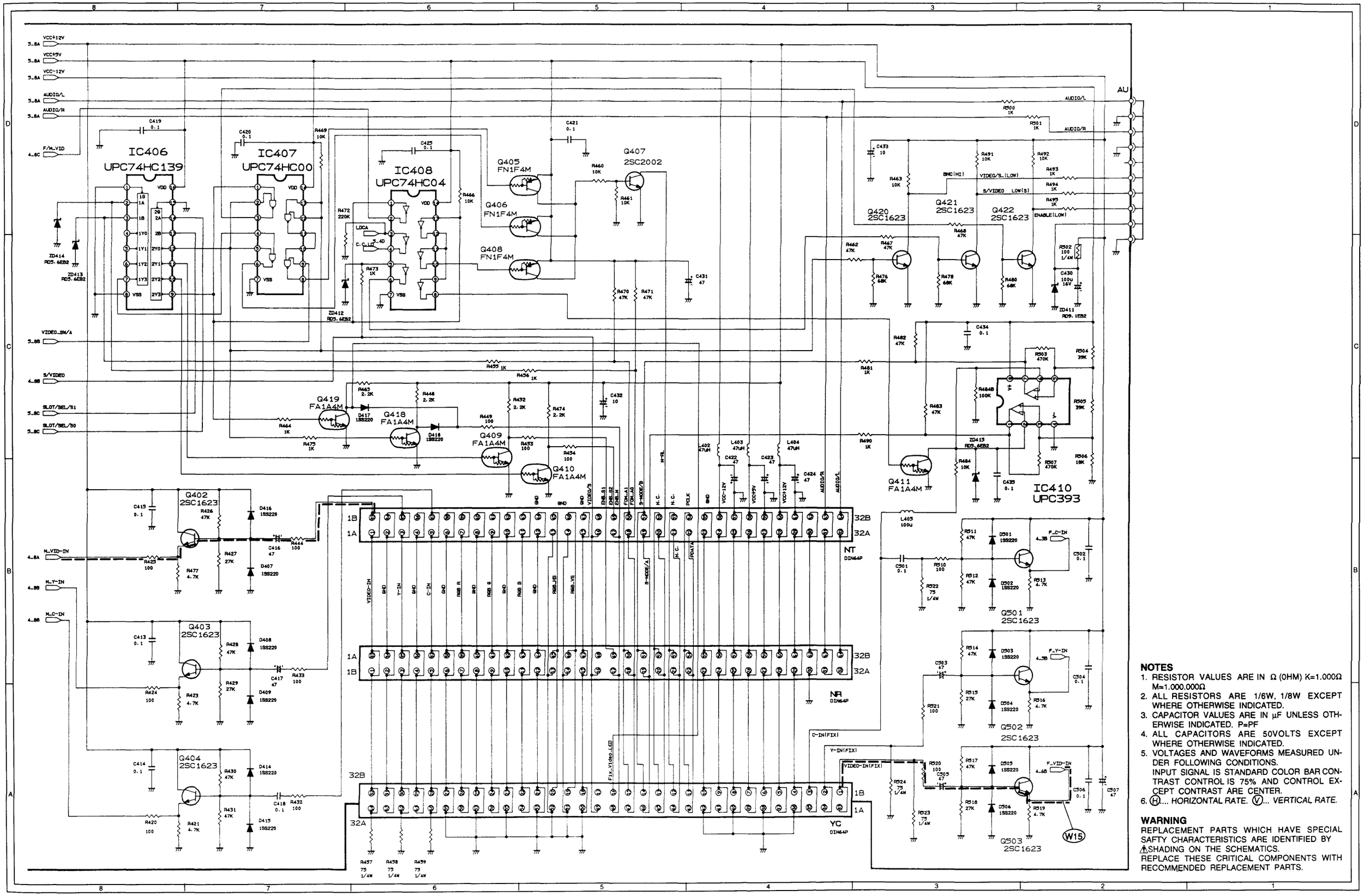

NOTES

1. RESISTOR VALUES ARE IN Ω (OHM) K=1.000Ω M=1.000.000Ω
2. ALL RESISTORS ARE 1/6W, 1/8W EXCEPT WHERE OTHERWISE INDICATED.
3. CAPACITOR VALUES ARE IN μF UNLESS OTHERWISE INDICATED. P=PF
4. ALL CAPACITORS ARE 50VOLTS EXCEPT WHERE OTHERWISE INDICATED.
5. VOLTAGES AND WAVEFORMS MEASURED UNDER FOLLOWING CONDITIONS.
   INPUT SIGNAL IS STANDARD COLOR BAR CONTRAST CONTROL IS 75% AND CONTROL EXCEPT CONTRAST ARE CENTER.
6. Ⓗ.... HORIZONTAL RATE. Ⓥ... VERTICAL RATE.

WARNING

REPLACEMENT PARTS WHICH HAVE SPECIAL SAFTY CHARACTERISTICS ARE IDENTIFIED BY ⚠SHADING ON THE SCHEMATICS.
REPLACE THESE CRITICAL COMPONENTS WITH RECOMMENDED REPLACEMENT PARTS.

D. T. PWB (PWC-4071 (A)) WAVE FORM

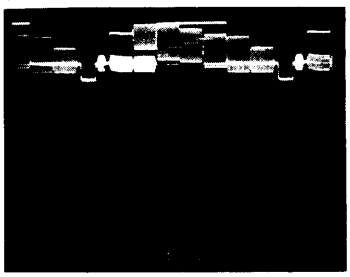
W1

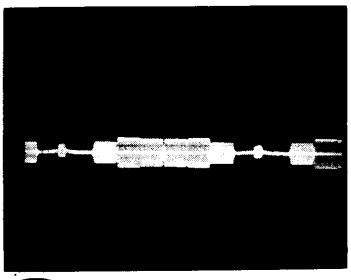
W6

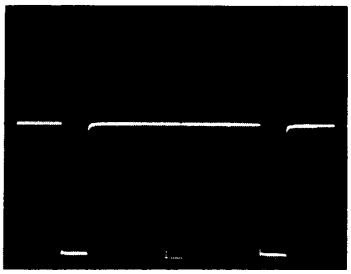
W11

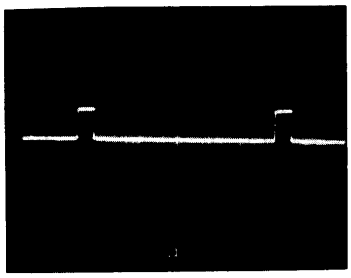
W2

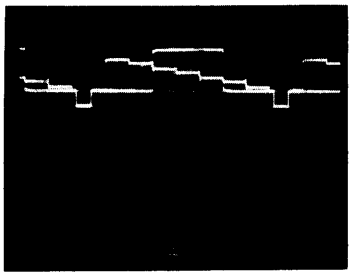
W7

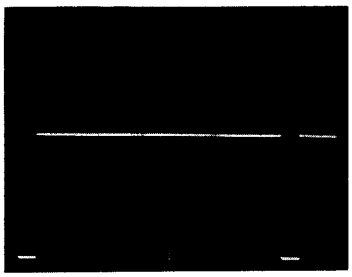
W12

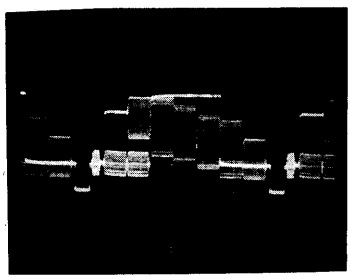
W3

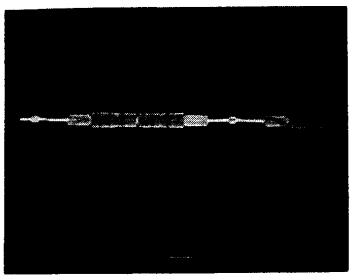
W8

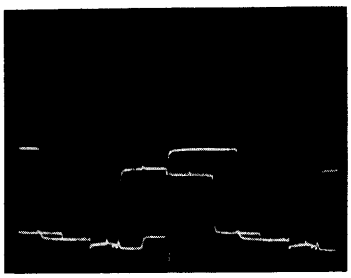
W13

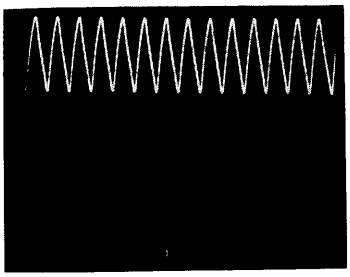
W4

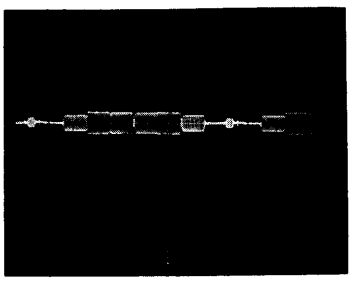
W9

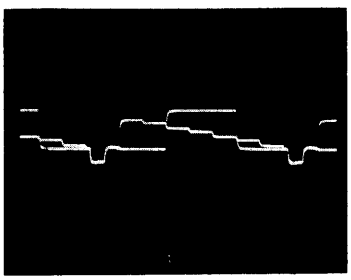
W14

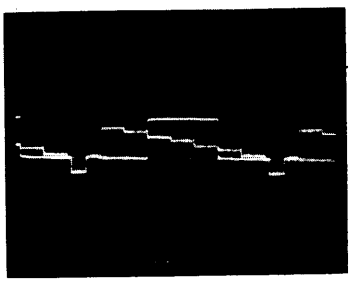
W5

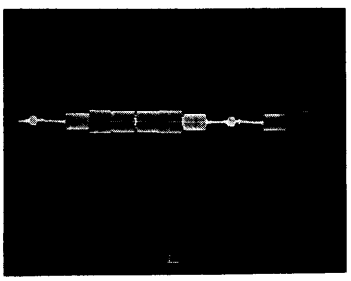
W10

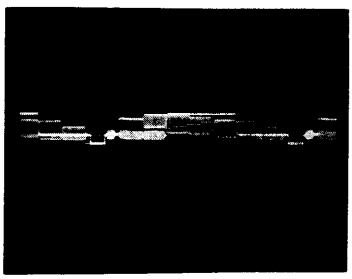
W15

D. T. PWB (PWC-4071 (A))
PARTS SIDE

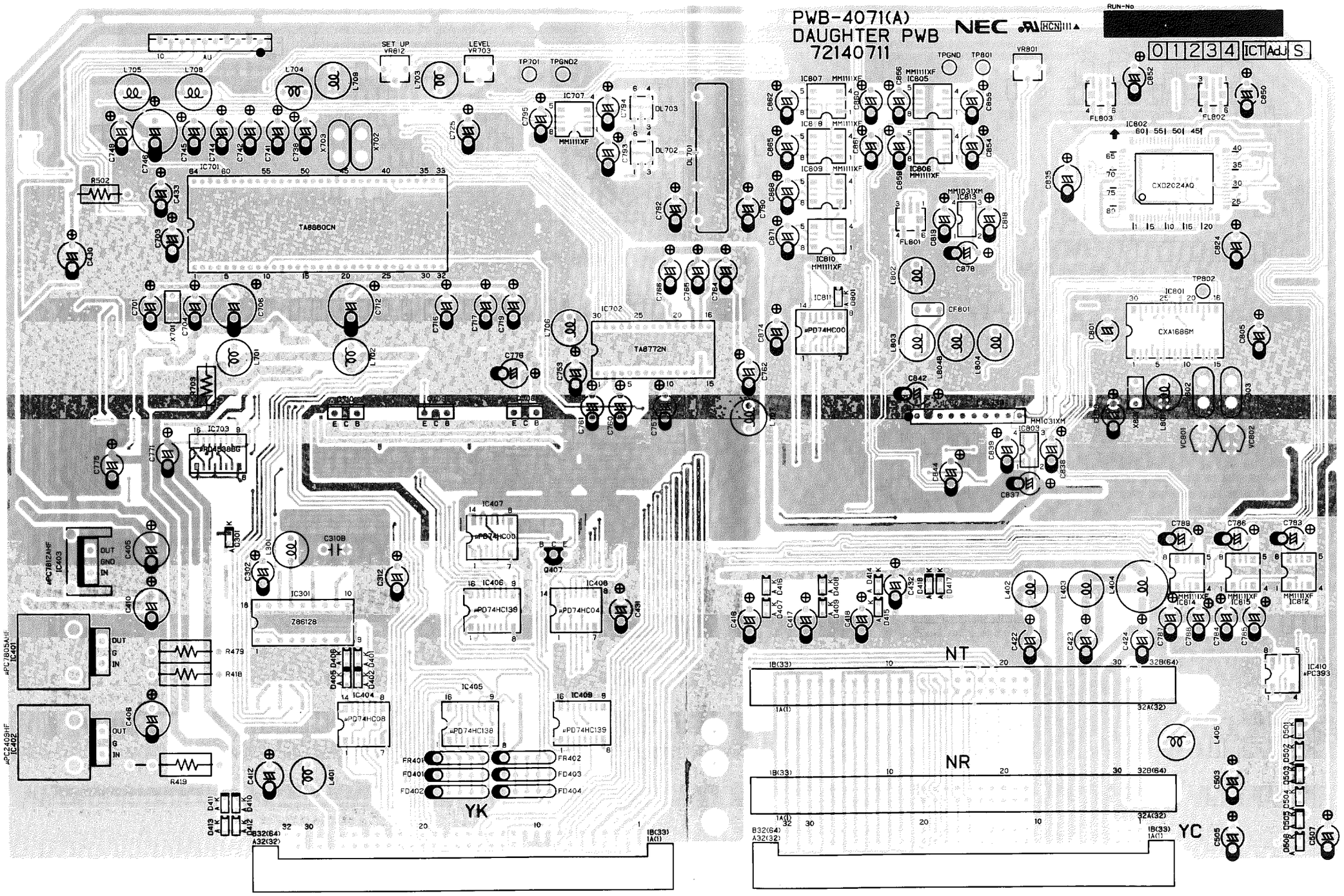

D. T. PWB (PWC-4071 (A))
SOLDER SIDE

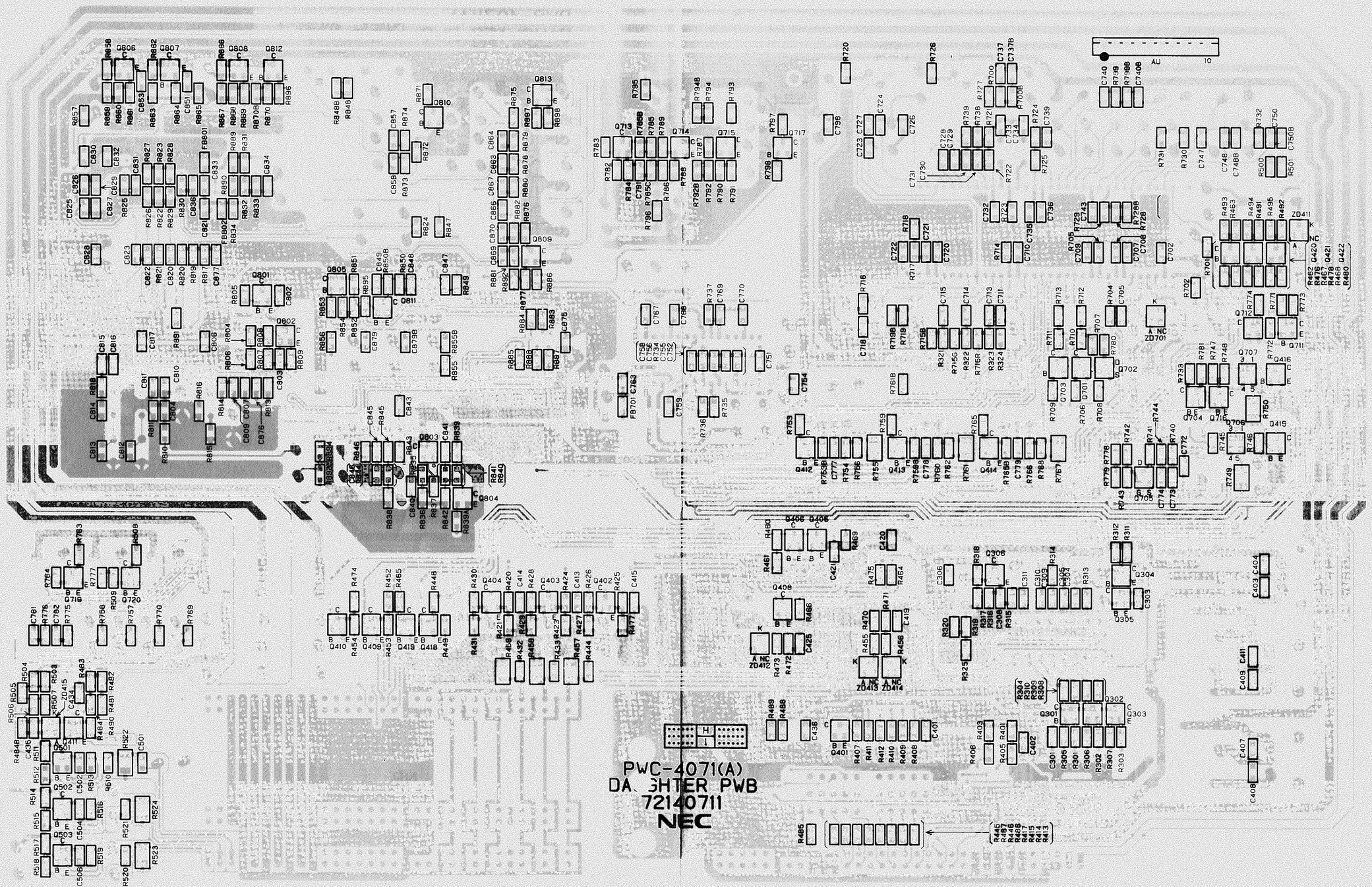

V-MOTHER PWB (PWC-4197)

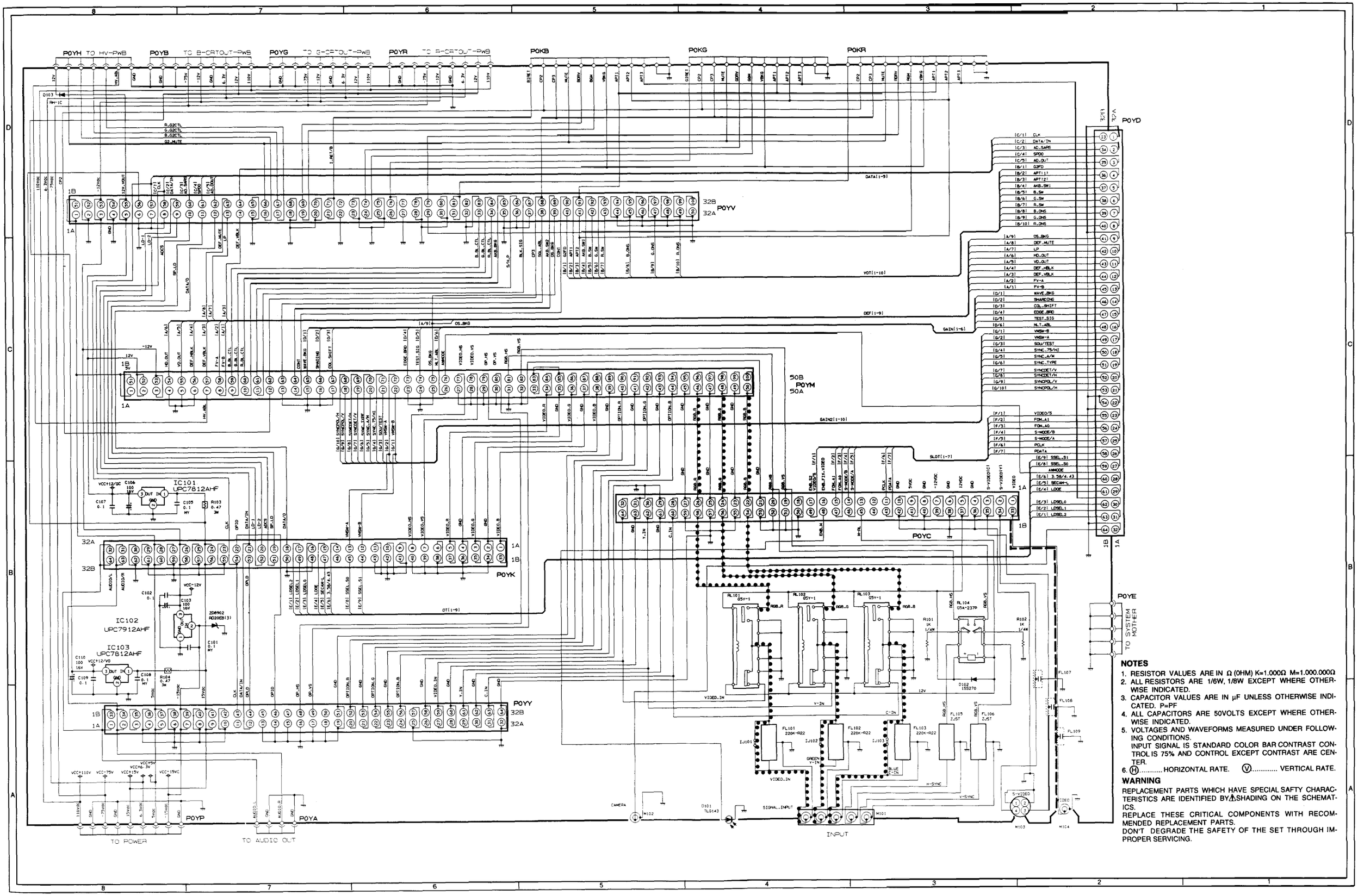

NOTES

1. RESISTOR VALUES ARE IN Ω (OHM) K=1.000Ω M=1.000.000Ω
2. ALL RESISTORS ARE 1/6W, 1/8W EXCEPT WHERE OTHERWISE INDICATED.
3. CAPACITOR VALUES ARE IN μF UNLESS OTHERWISE INDICATED. P=PF
4. ALL CAPACITORS ARE 50VOLTS EXCEPT WHERE OTHERWISE INDICATED.
5. VOLTAGES AND WAVEFORMS MEASURED UNDER FOLLOWING CONDITIONS.
   INPUT SIGNAL IS STANDARD COLOR BAR CONTRAST CONTROL IS 75% AND CONTROL EXCEPT CONTRAST ARE CENTER.
6. Ⓗ..... HORIZONTAL RATE. Ⓥ..... VERTICAL RATE.

WARNING

REPLACEMENT PARTS WHICH HAVE SPECIAL SAFTY CHARACTERISTICS ARE IDENTIFIED BY ⚠ SHADING ON THE SCHEMATICS.
REPLACE THESE CRITICAL COMPONENTS WITH RECOMMENDED REPLACEMENT PARTS.
DON'T DEGRADE THE SAFETY OF THE SET THROUGH IMPROPER SERVICING.

V-MOTHER PWB (PWC-4197)
PARTS SIDE

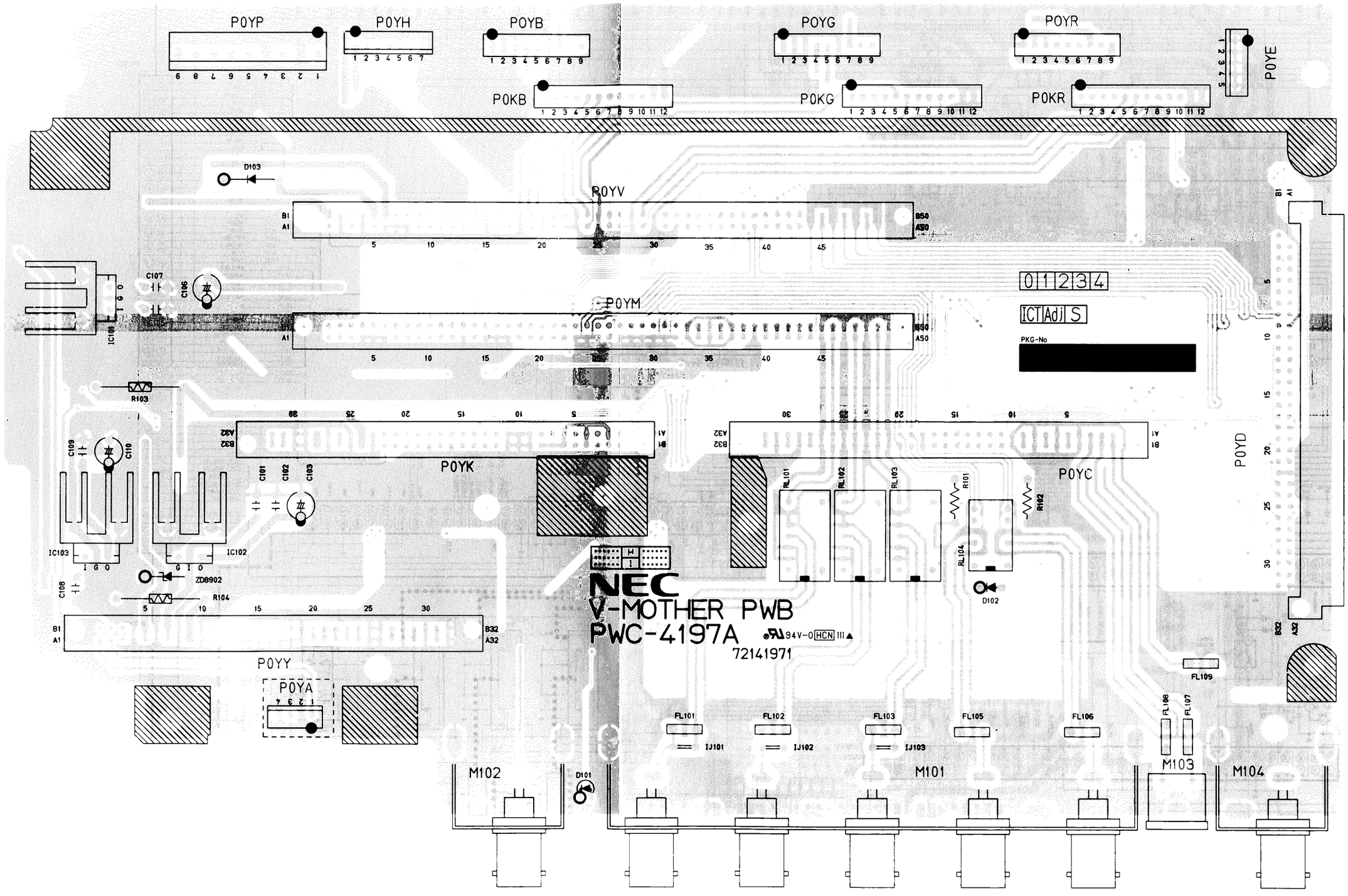

V-MOTHER PWB (PWC-4197)
SOLDER SIDE

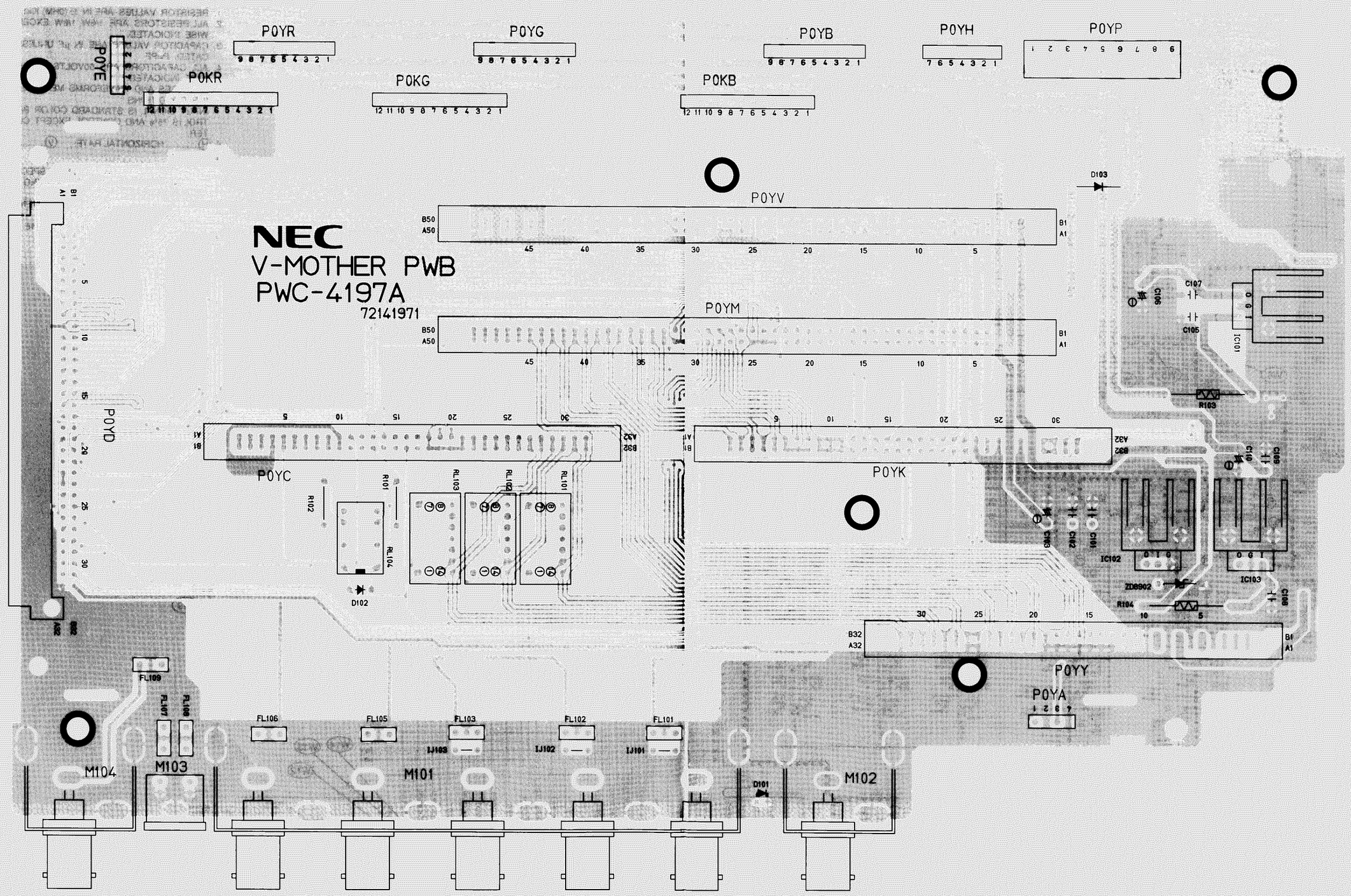

GAIN CTL PWB (PWC-4196) (1/3)

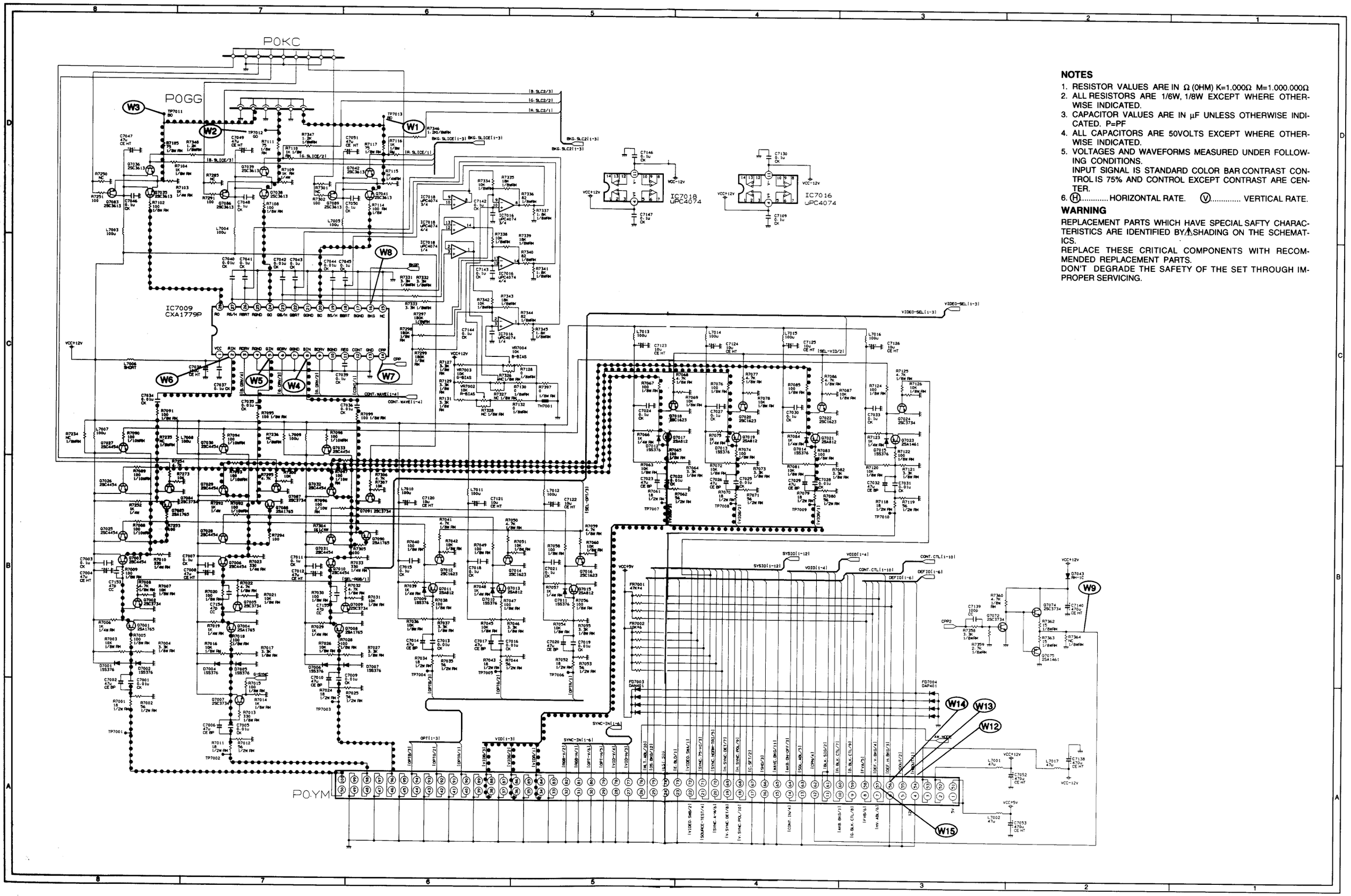

NOTES

1. RESISTOR VALUES ARE IN Ω (OHM) K=1.000Ω M=1.000.000Ω
2. ALL RESISTORS ARE 1/6W, 1/8W EXCEPT WHERE OTHERWISE INDICATED.
3. CAPACITOR VALUES ARE IN μF UNLESS OTHERWISE INDICATED. P=PF
4. ALL CAPACITORS ARE 50VOLTS EXCEPT WHERE OTHERWISE INDICATED.
5. VOLTAGES AND WAVEFORMS MEASURED UNDER FOLLOWING CONDITIONS.
   INPUT SIGNAL IS STANDARD COLOR BAR CONTRAST CONTROL IS 75% AND CONTROL EXCEPT CONTRAST ARE CENTER.
6. Ⓗ..... HORIZONTAL RATE. Ⓥ..... VERTICAL RATE.

WARNING

REPLACEMENT PARTS WHICH HAVE SPECIAL SAFTY CHARACTERISTICS ARE IDENTIFIED BY ⚠ SHADING ON THE SCHEMATICS.
REPLACE THESE CRITICAL COMPONENTS WITH RECOMMENDED REPLACEMENT PARTS.
DON'T DEGRADE THE SAFETY OF THE SET THROUGH IMPROPER SERVICING.

GAIN CTL PWB (PWC-4196) (2/3)

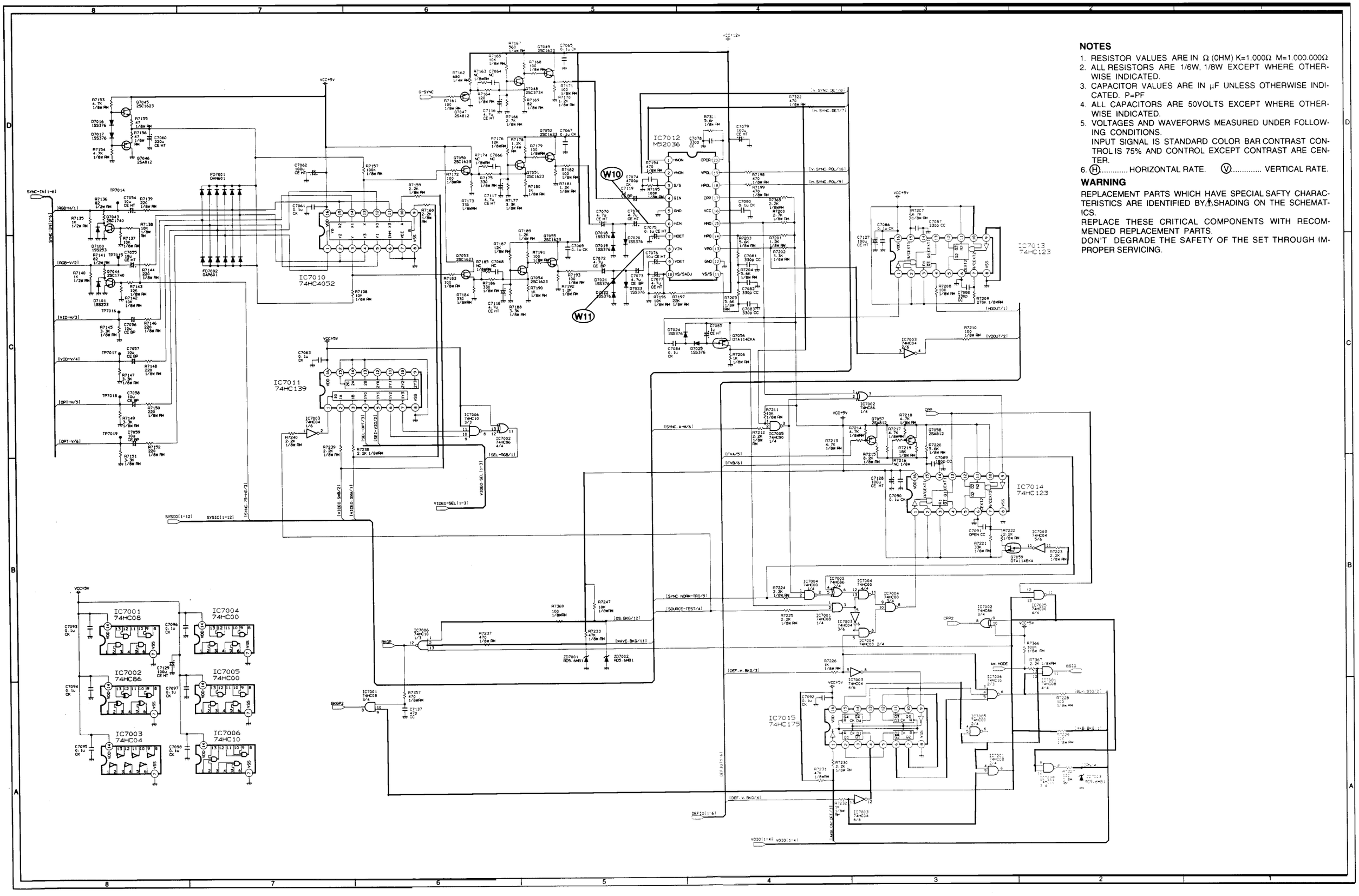

NOTES

1. RESISTOR VALUES ARE IN Ω (OHM) K=1.000Ω M=1.000.000Ω
2. ALL RESISTORS ARE 1/6W, 1/8W EXCEPT WHERE OTHERWISE INDICATED.
3. CAPACITOR VALUES ARE IN μF UNLESS OTHERWISE INDICATED. P=PF
4. ALL CAPACITORS ARE 50VOLTS EXCEPT WHERE OTHERWISE INDICATED.
5. VOLTAGES AND WAVEFORMS MEASURED UNDER FOLLOWING CONDITIONS.
   INPUT SIGNAL IS STANDARD COLOR BAR CONTRAST CONTROL IS 75% AND CONTROL EXCEPT CONTRAST ARE CENTER.
6. Ⓗ..... HORIZONTAL RATE. Ⓥ..... VERTICAL RATE.

WARNING

REPLACEMENT PARTS WHICH HAVE SPECIAL SAFTY CHARACTERISTICS ARE IDENTIFIED BY ⚠ SHADING ON THE SCHEMATICS.
REPLACE THESE CRITICAL COMPONENTS WITH RECOMMENDED REPLACEMENT PARTS.
DON'T DEGRADE THE SAFETY OF THE SET THROUGH IMPROPER SERVICING.

GAIN CTL PWB (PWC-4196) (3/3)

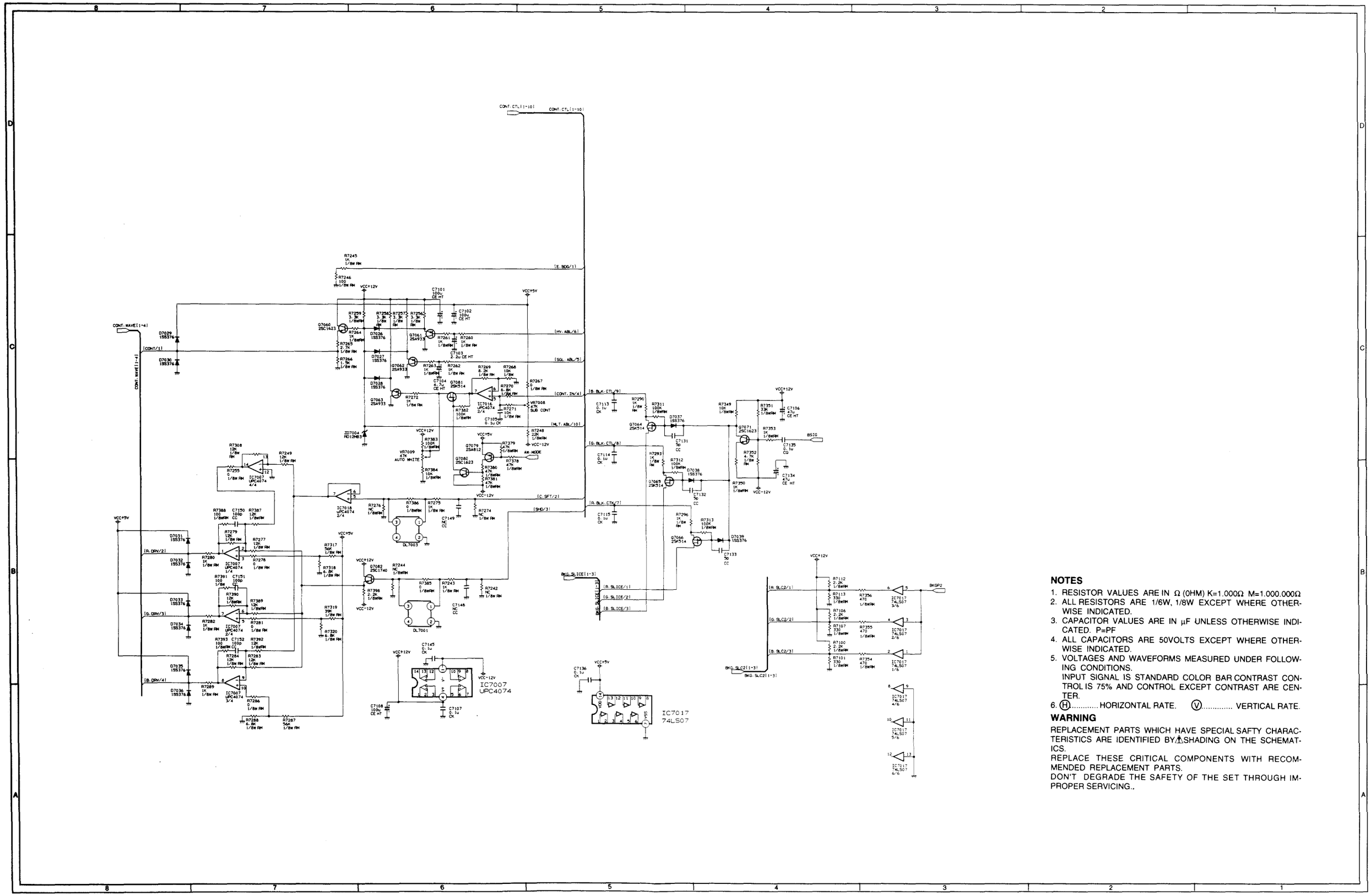

NOTES

1. RESISTOR VALUES ARE IN Ω (0HM) K=1.000Ω M=1.000.000Ω
2. ALL RESISTORS ARE 1/6W, 1/8W EXCEPT WHERE OTHERWISE INDICATED.
3. CAPACITOR VALUES ARE IN μF UNLESS OTHERWISE INDICATED. P=PF
4. ALL CAPACITORS ARE 50VOLTS EXCEPT WHERE OTHERWISE INDICATED.
5. VOLTAGES AND WAVEFORMS MEASURED UNDER FOLLOWING CONDITIONS.
   INPUT SIGNAL IS STANDARD COLOR BAR CONTRAST CONTROL IS 75% AND CONTROL EXCEPT CONTRAST ARE CENTER.
6. Ⓗ..... HORIZONTAL RATE. Ⓥ..... VERTICAL RATE.

WARNING

REPLACEMENT PARTS WHICH HAVE SPECIAL SAFTY CHARACTERISTICS ARE IDENTIFIED BY ⚠ SHADING ON THE SCHEMATICS.
REPLACE THESE CRITICAL COMPONENTS WITH RECOMMENDED REPLACEMENT PARTS.
DON'T DEGRADE THE SAFETY OF THE SET THROUGH IMPROPER SERVICING..

GAIN CTL PWB (PWC-4196) WAVE FORM

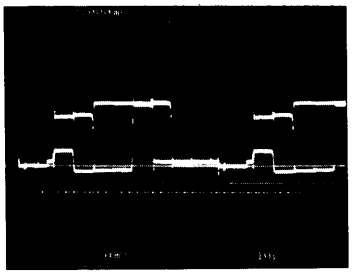

W1

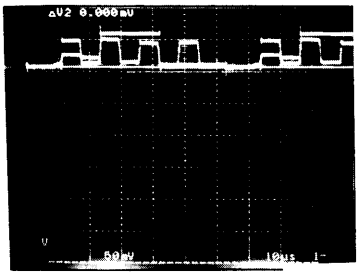

W6

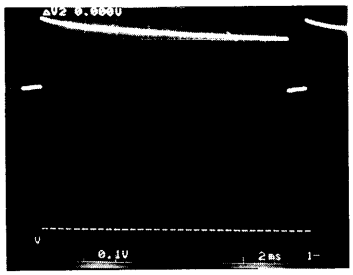

W11

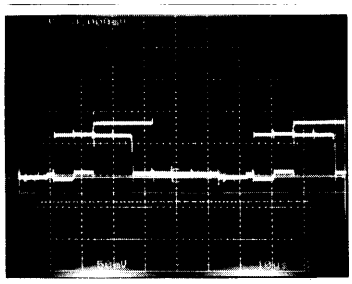

W2

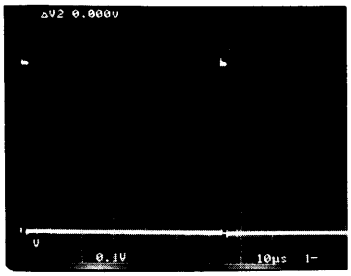

W7

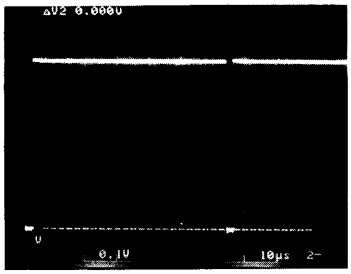

W12

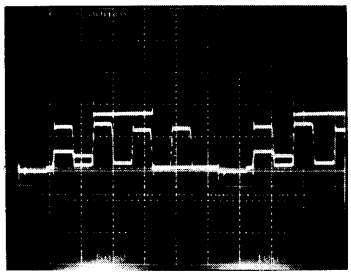

W3

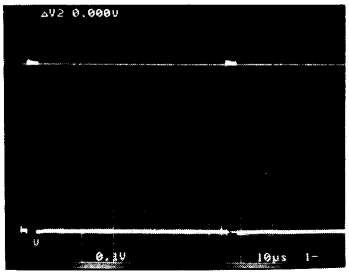

W8

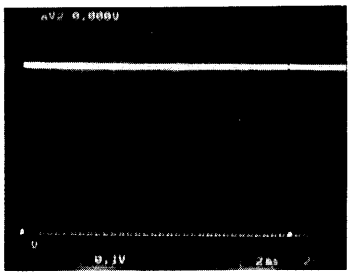

W13

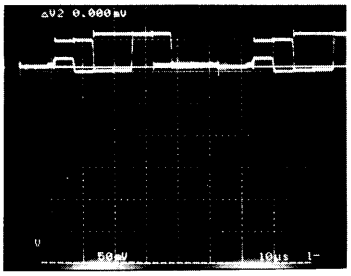

W4

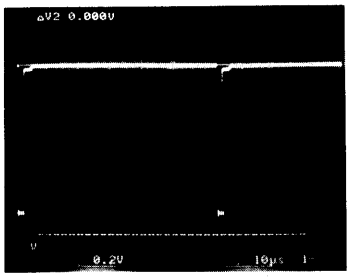

W9

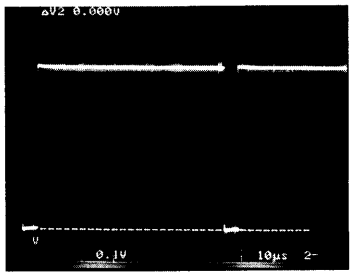

W14

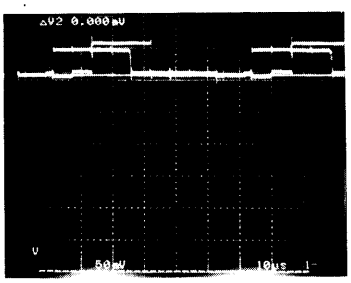

W5

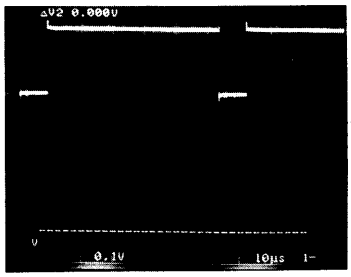

W10

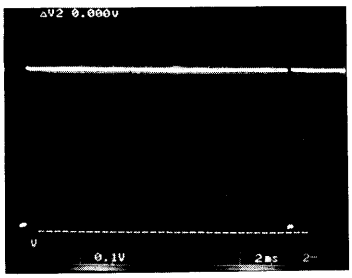

W15

GAIN CTL PWB (PWC-4196)
PARTS SIDE

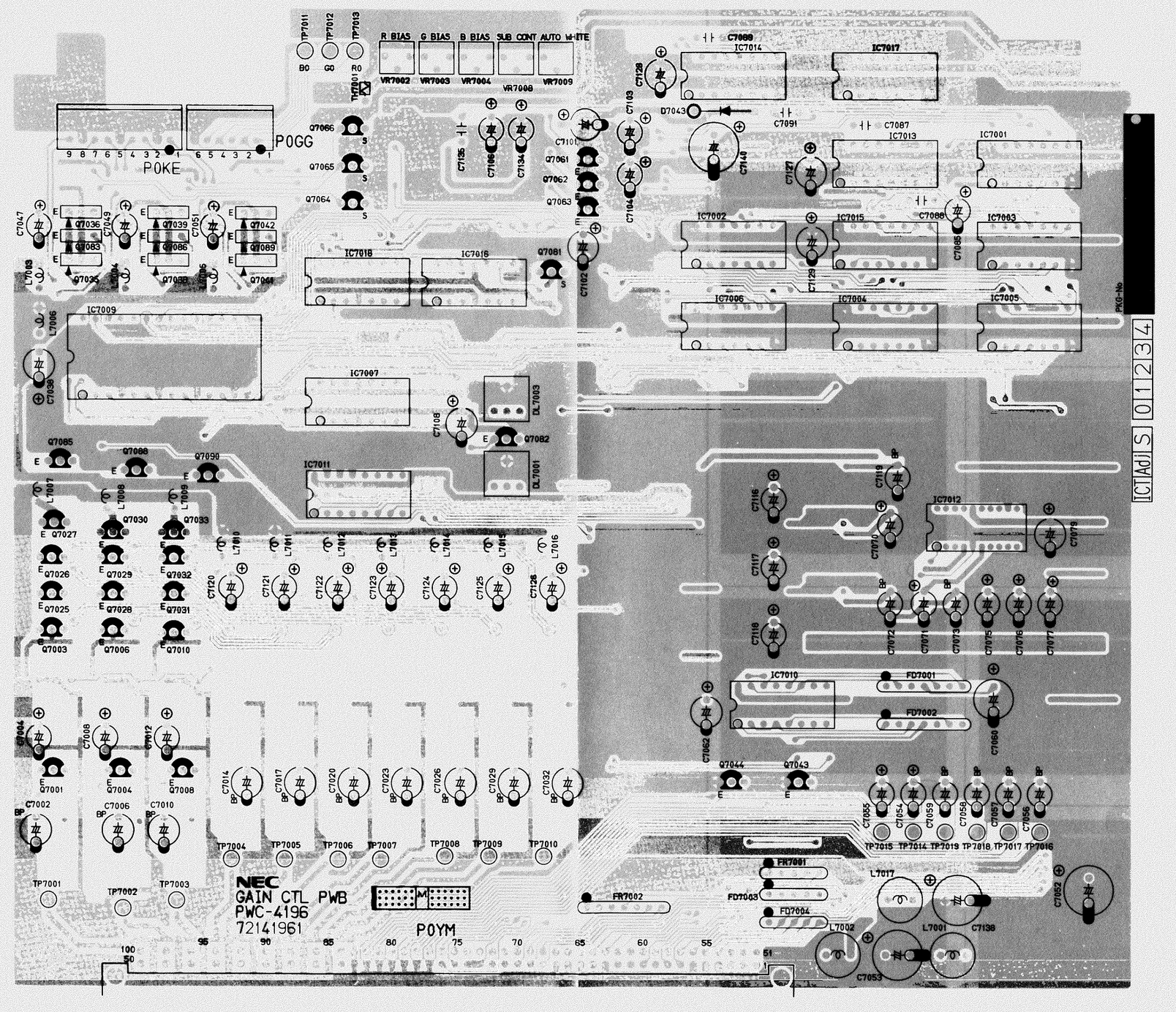

GAIN CTL PWB (PWC-4196)
SOLDER SIDE

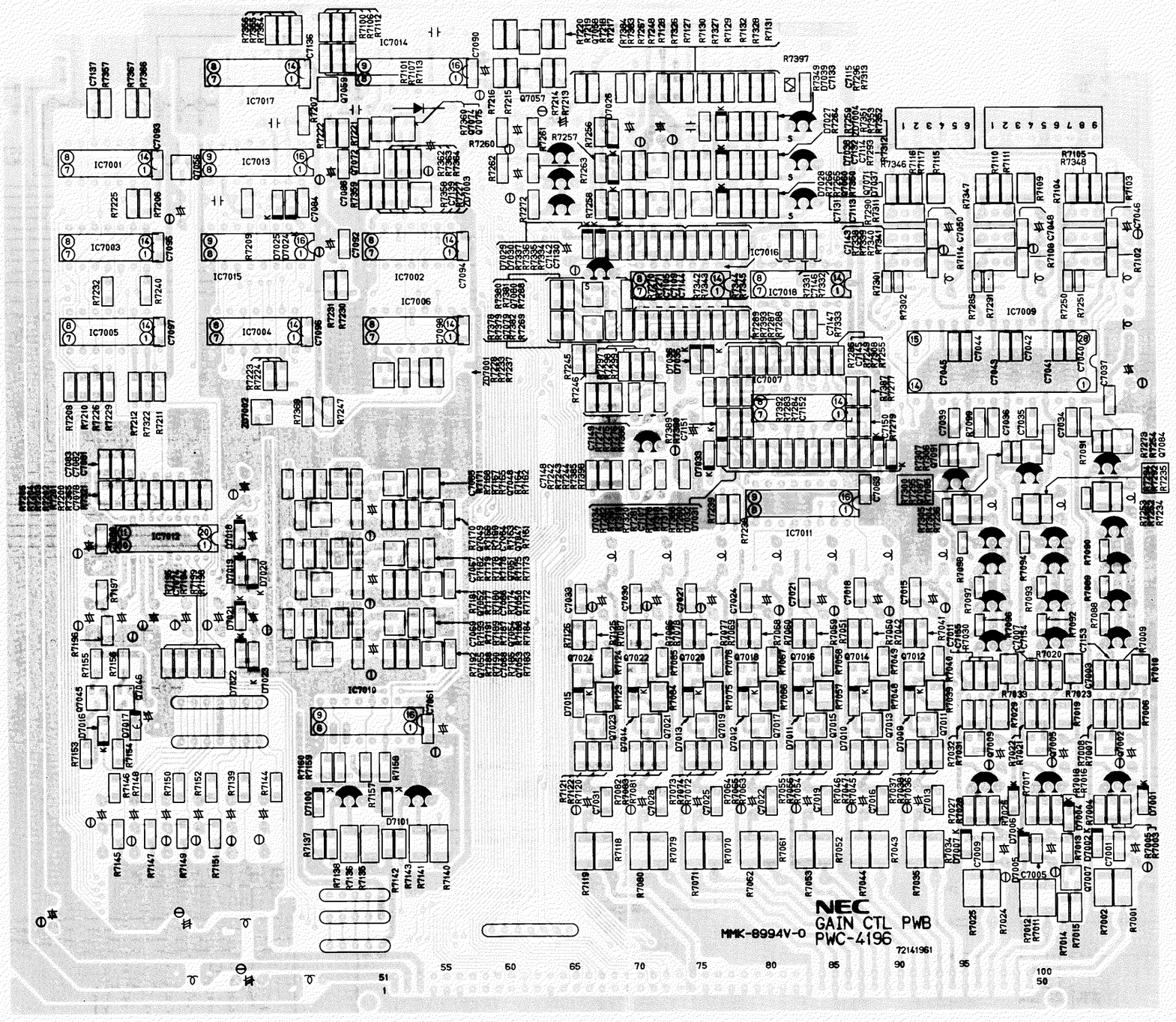

VIDEO OUT PWB (PWC-4191) (1/4)

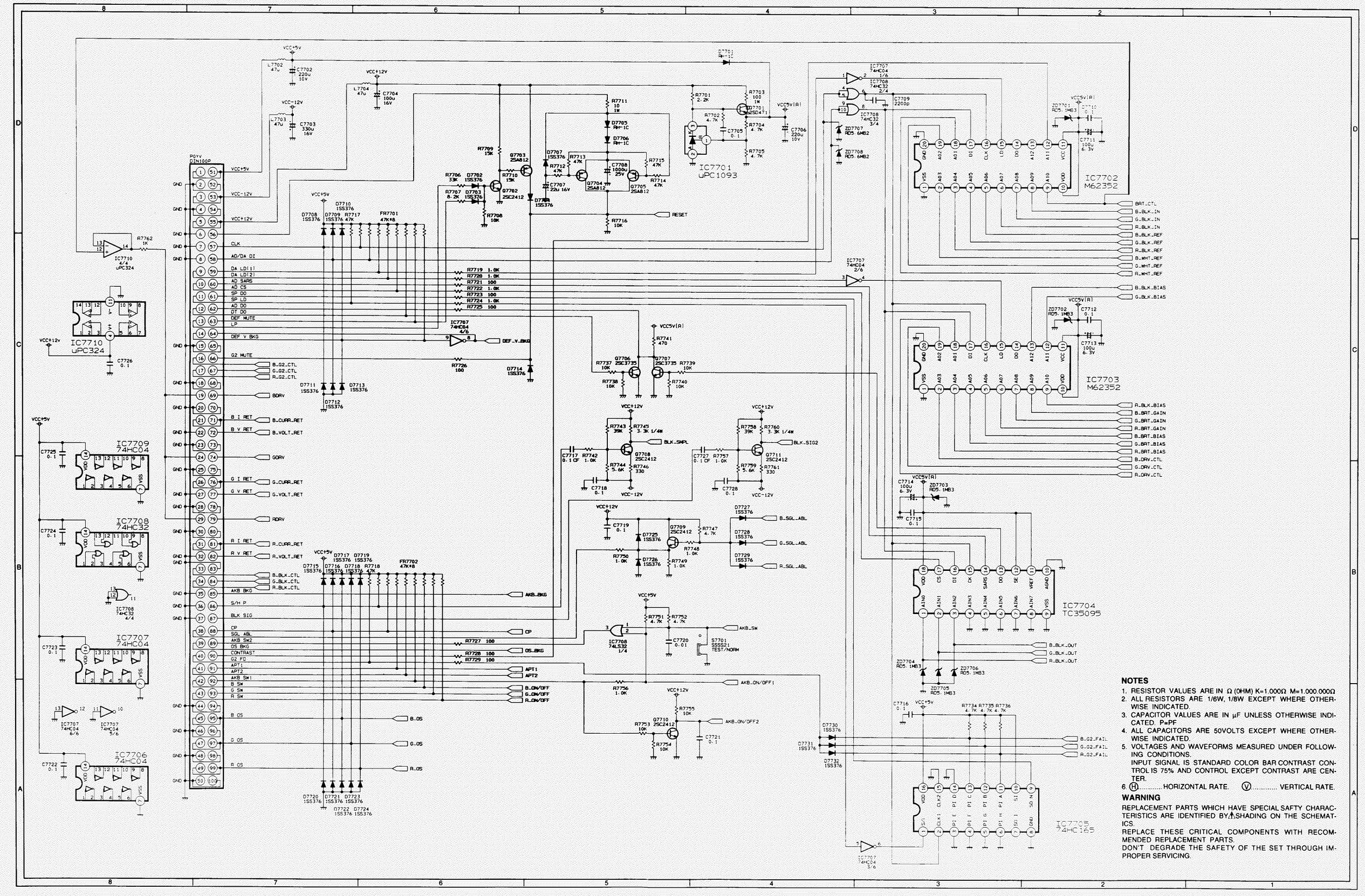

NOTES

1. RESISTOR VALUES ARE IN Ω (OHM) K=1.000Ω M=1.000.000Ω
2. ALL RESISTORS ARE 1/6W, 1/8W EXCEPT WHERE OTHERWISE INDICATED.
3. CAPACITOR VALUES ARE IN μF UNLESS OTHERWISE INDICATED. P=PF
4. ALL CAPACITORS ARE 50VOLTS EXCEPT WHERE OTHERWISE INDICATED.
5. VOLTAGES AND WAVEFORMS MEASURED UNDER FOLLOWING CONDITIONS.
   INPUT SIGNAL IS STANDARD COLOR BAR CONTRAST CONTROL IS 75% AND CONTROL EXCEPT CONTRAST ARE CENTER.
6. Ⓗ..... HORIZONTAL RATE. Ⓥ..... VERTICAL RATE.

WARNING

REPLACEMENT PARTS WHICH HAVE SPECIAL SAFTY CHARACTERISTICS ARE IDENTIFIED BY ⚠ SHADING ON THE SCHEMATICS.
REPLACE THESE CRITICAL COMPONENTS WITH RECOMMENDED REPLACEMENT PARTS.
DON'T DEGRADE THE SAFETY OF THE SET THROUGH IMPROPER SERVICING.

VIDEO OUT PWB (PWC-4191) (2/4)

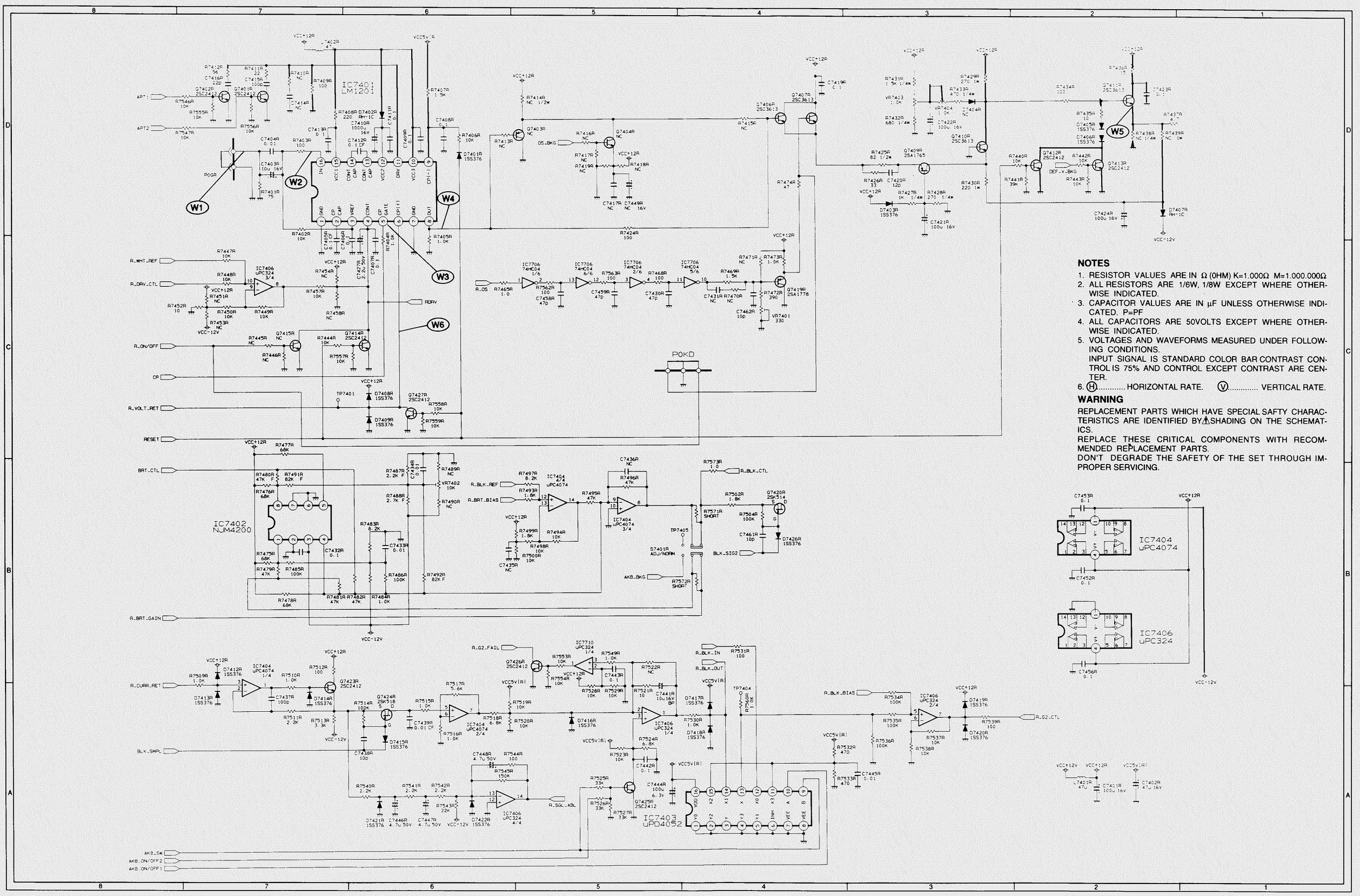

NOTES

1. RESISTOR VALUES ARE IN Ω (OHM) K=1.000Ω M=1.000.000Ω
2. ALL RESISTORS ARE 1/6W, 1/8W EXCEPT WHERE OTHERWISE INDICATED.
3. CAPACITOR VALUES ARE IN μF UNLESS OTHERWISE INDICATED. P=PF
4. ALL CAPACITORS ARE 50VOLTS EXCEPT WHERE OTHERWISE INDICATED.
5. VOLTAGES AND WAVEFORMS MEASURED UNDER FOLLOWING CONDITIONS.
   INPUT SIGNAL IS STANDARD COLOR BAR CONTRAST CONTROL IS 75% AND CONTROL EXCEPT CONTRAST ARE CENTER.
6. Ⓗ..... HORIZONTAL RATE. Ⓥ..... VERTICAL RATE.

WARNING

REPLACEMENT PARTS WHICH HAVE SPECIAL SAFTY CHARACTERISTICS ARE IDENTIFIED BY ⚠ SHADING ON THE SCHEMATICS.
REPLACE THESE CRITICAL COMPONENTS WITH RECOMMENDED REPLACEMENT PARTS.
DON'T DEGRADE THE SAFETY OF THE SET THROUGH IMPROPER SERVICING.

VIDEO OUT PWB (PWC-4191) (3/4)

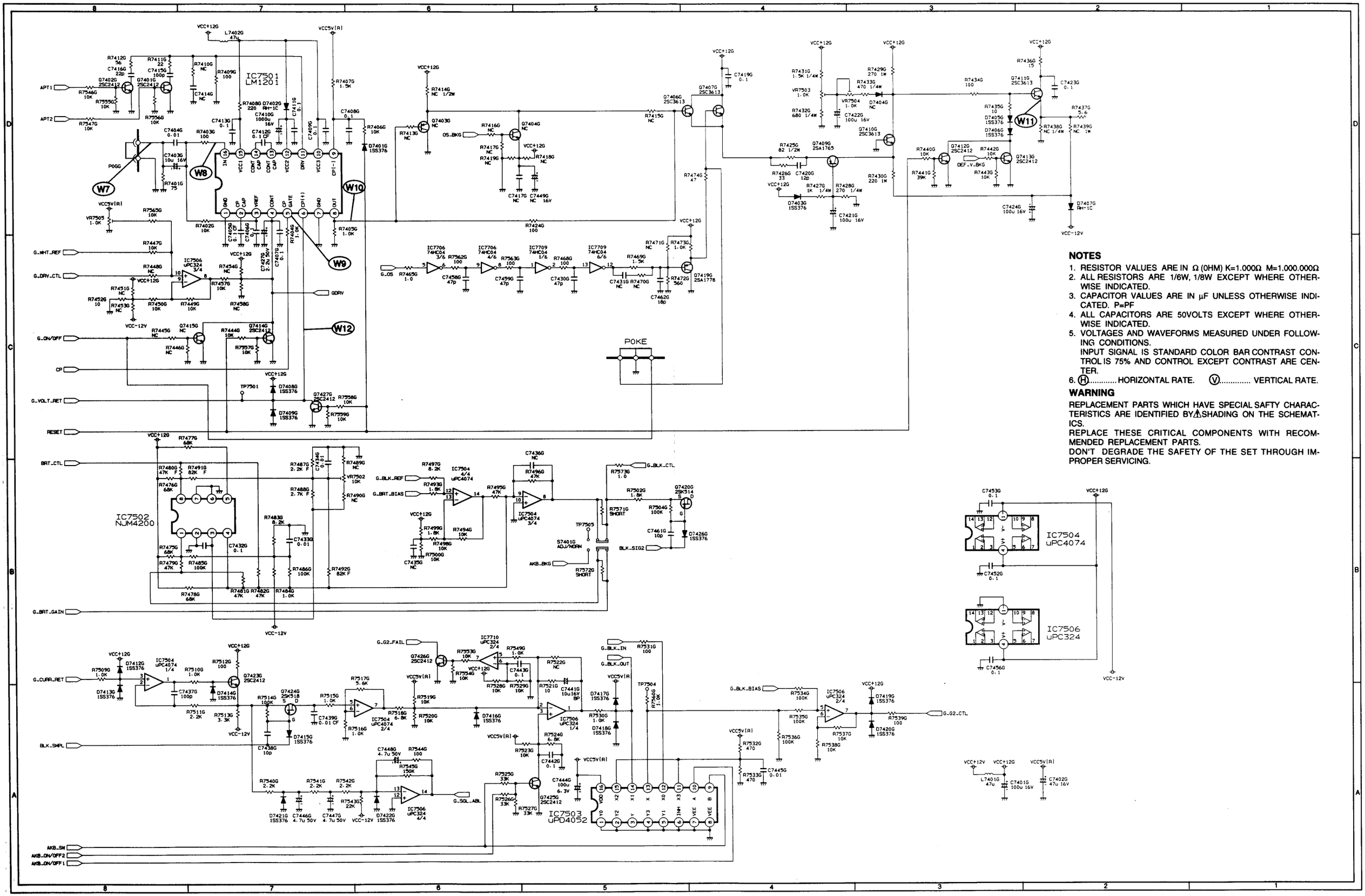

NOTES

1. RESISTOR VALUES ARE IN Ω (OHM) K=1.000Ω M=1.000.000Ω
2. ALL RESISTORS ARE 1/6W, 1/8W EXCEPT WHERE OTHERWISE INDICATED.
3. CAPACITOR VALUES ARE IN μF UNLESS OTHERWISE INDICATED. P=PF
4. ALL CAPACITORS ARE 50VOLTS EXCEPT WHERE OTHERWISE INDICATED.
5. VOLTAGES AND WAVEFORMS MEASURED UNDER FOLLOWING CONDITIONS.
   INPUT SIGNAL IS STANDARD COLOR BAR CONTRAST CONTROL IS 75% AND CONTROL EXCEPT CONTRAST ARE CENTER.
6. Ⓗ..... HORIZONTAL RATE. Ⓥ..... VERTICAL RATE.

WARNING

REPLACEMENT PARTS WHICH HAVE SPECIAL SAFTY CHARACTERISTICS ARE IDENTIFIED BY⚠SHADING ON THE SCHEMATICS.
REPLACE THESE CRITICAL COMPONENTS WITH RECOMMENDED REPLACEMENT PARTS.
DON'T DEGRADE THE SAFETY OF THE SET THROUGH IMPROPER SERVICING.

VIDEO OUT PWB (PWC-4191) (4/4)

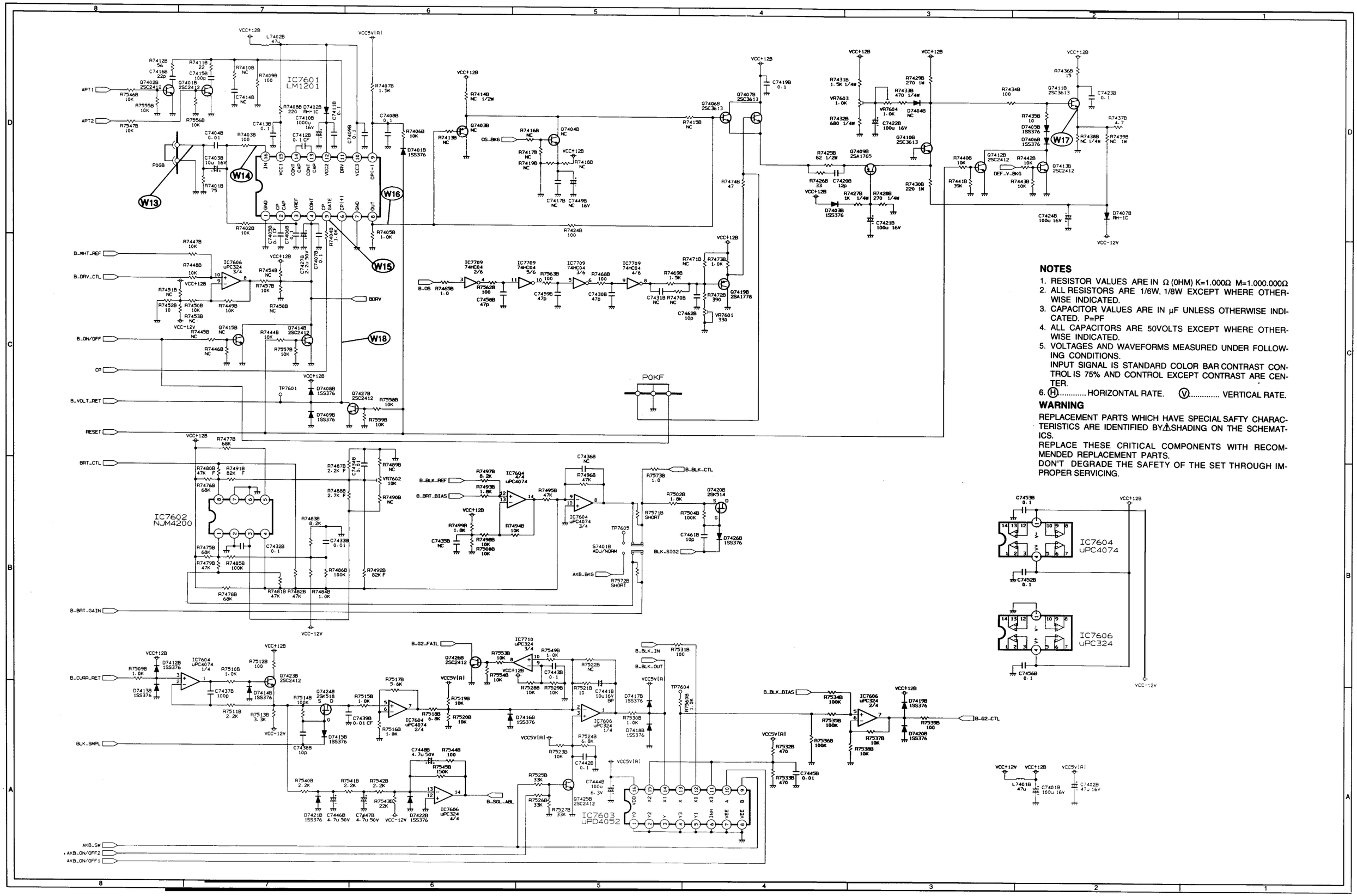

NOTES

1. RESISTOR VALUES ARE IN Ω (OHM) K=1.000Ω M=1.000.000Ω
2. ALL RESISTORS ARE 1/6W, 1/8W EXCEPT WHERE OTHERWISE INDICATED.
3. CAPACITOR VALUES ARE IN μF UNLESS OTHERWISE INDICATED. P=PF
4. ALL CAPACITORS ARE 50VOLTS EXCEPT WHERE OTHERWISE INDICATED.
5. VOLTAGES AND WAVEFORMS MEASURED UNDER FOLLOWING CONDITIONS.
   INPUT SIGNAL IS STANDARD COLOR BAR CONTRAST CONTROL IS 75% AND CONTROL EXCEPT CONTRAST ARE CENTER.
6. Ⓗ..... HORIZONTAL RATE. Ⓥ..... VERTICAL RATE.

WARNING

REPLACEMENT PARTS WHICH HAVE SPECIAL SAFTY CHARACTERISTICS ARE IDENTIFIED BY ⚠ SHADING ON THE SCHEMATICS.
REPLACE THESE CRITICAL COMPONENTS WITH RECOMMENDED REPLACEMENT PARTS.
DON'T DEGRADE THE SAFETY OF THE SET THROUGH IMPROPER SERVICING.

VIDEO OUT PWB (PWC-4191) WAVE FORM

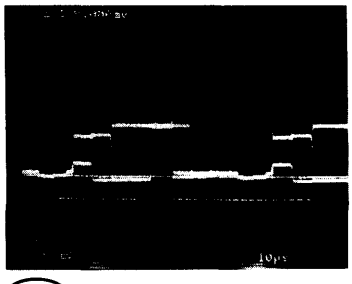
W1

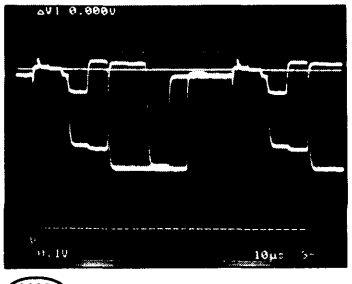
W6

W11

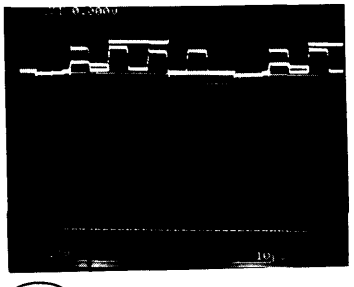
W16

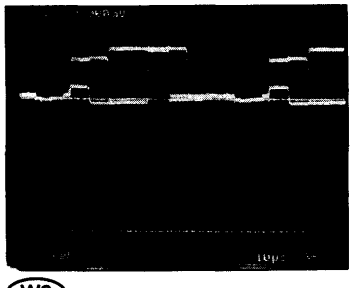
W2

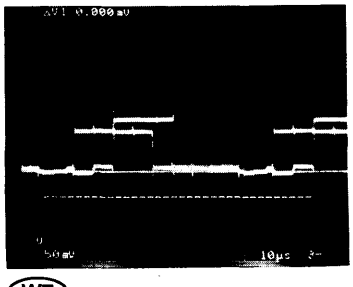
W7

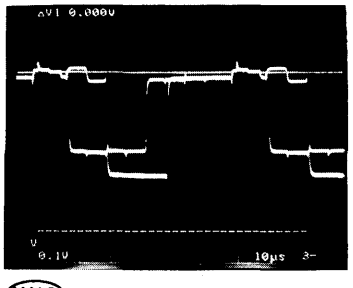
W12

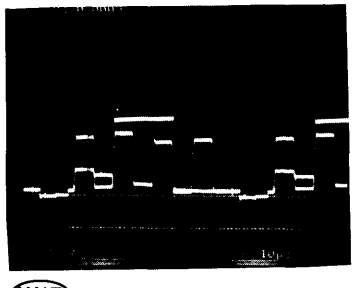
W17

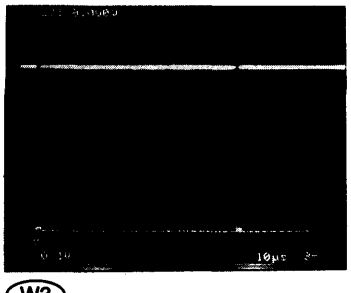
W3

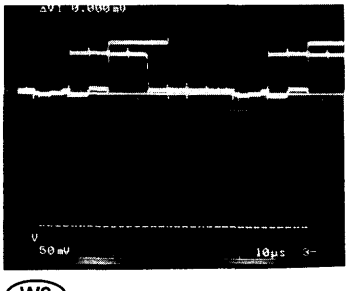
W8

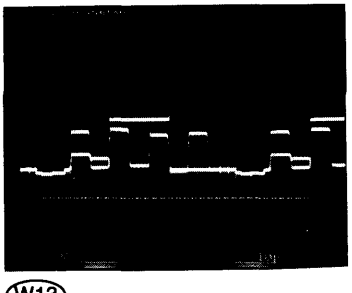
W13

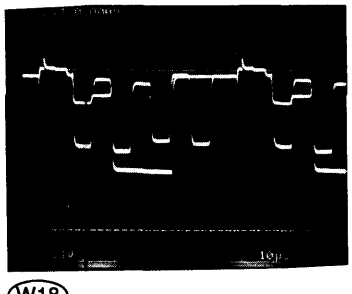
W18

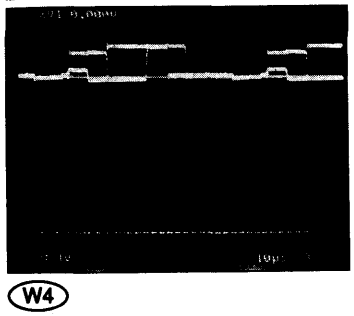
W4

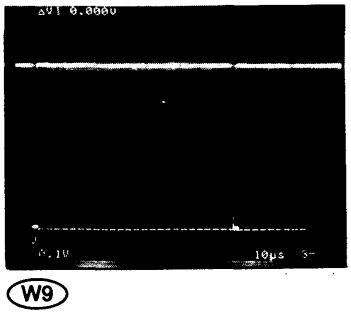
W9

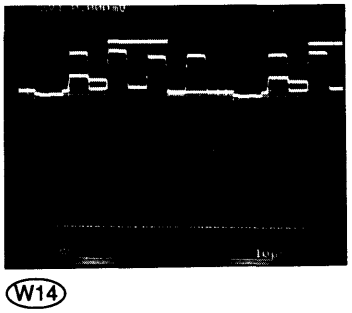
W14

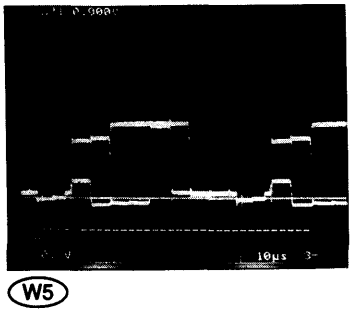
W5

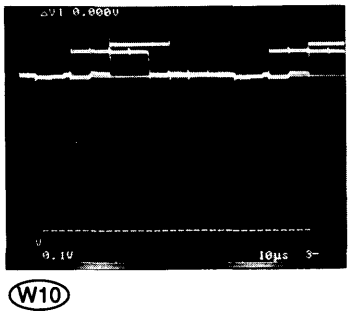
W10

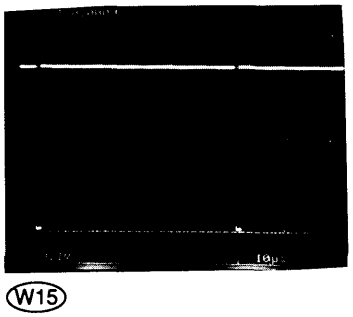
W15

VIDEO OUT PWB (PWC-4191)
PARTS SIDE

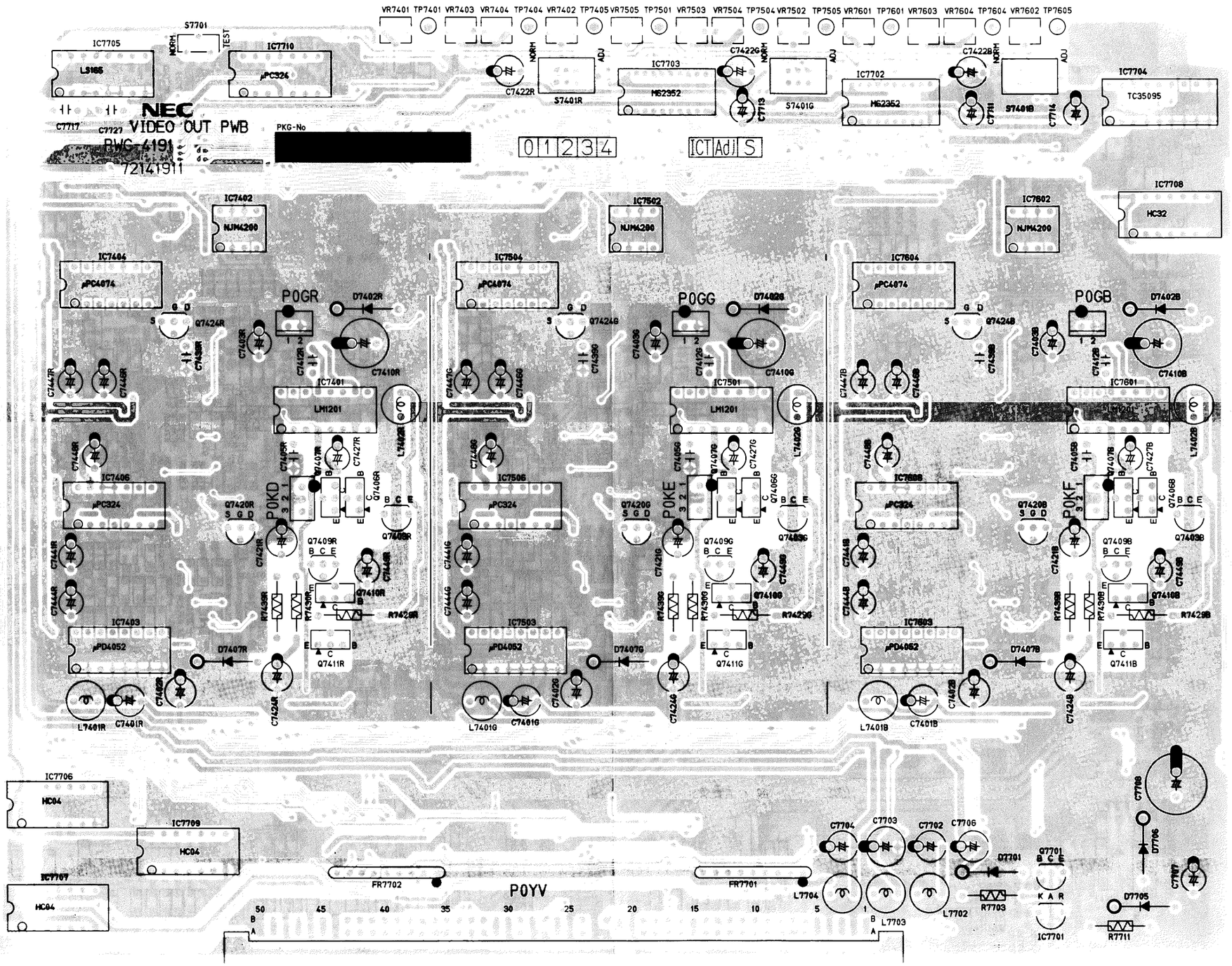

VIDEO OUT PWB (PWC-4191)
SOLDER SIDE

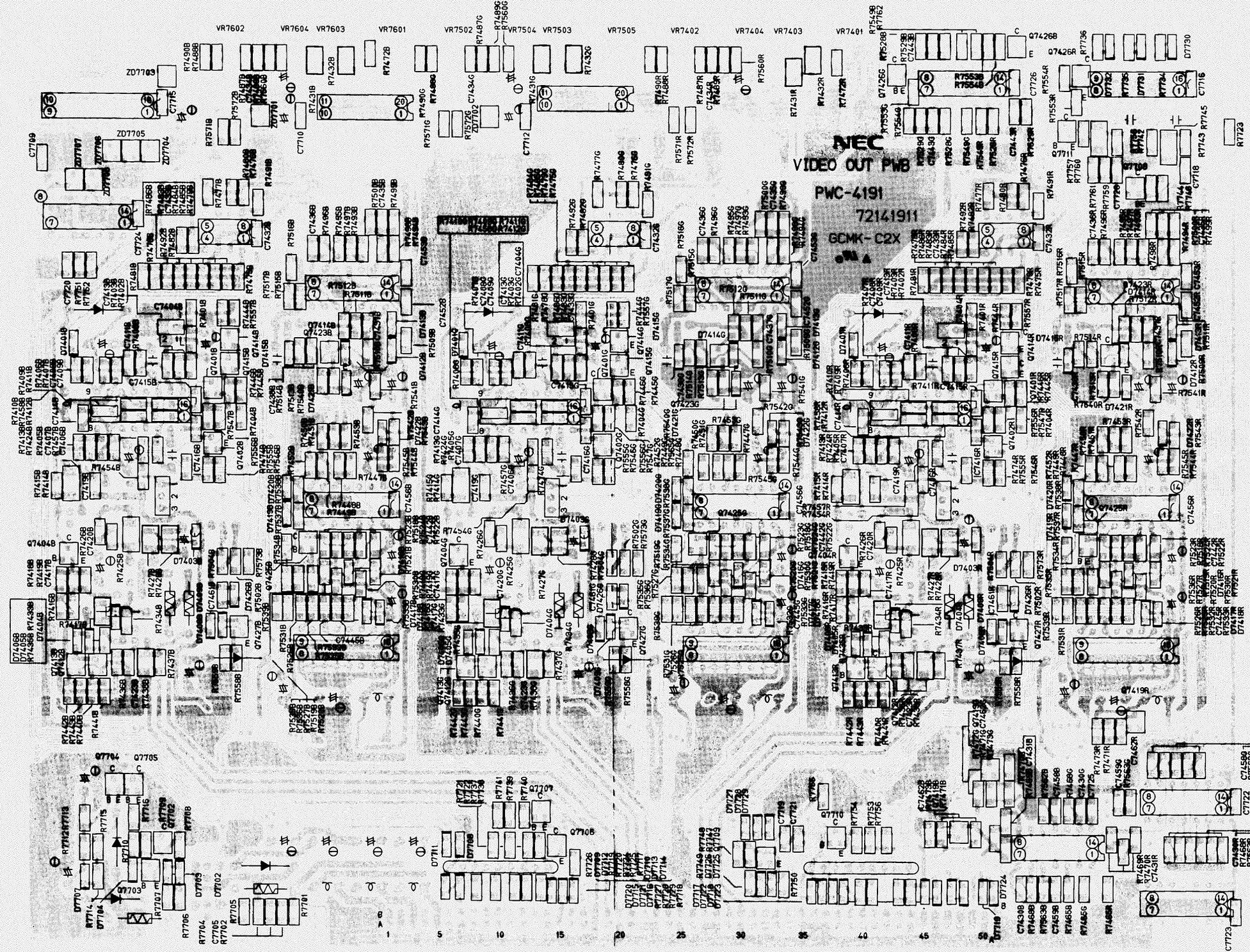

B-CRTOUT PWB (PWC-4192C)

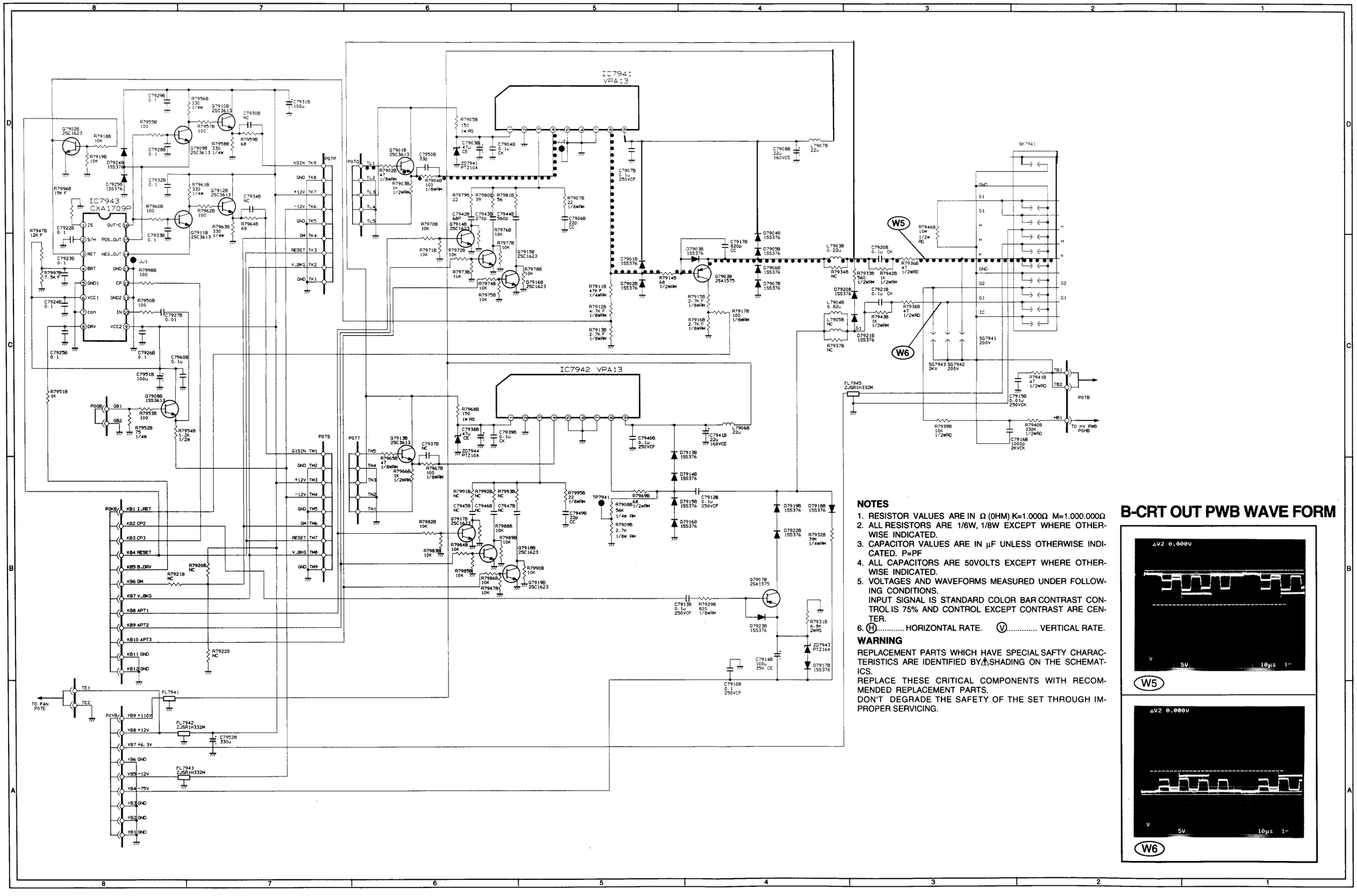

NOTES

1. RESISTOR VALUES ARE IN Ω (OHM) K=1.000Ω M=1.000.000Ω
2. ALL RESISTORS ARE 1/6W, 1/8W EXCEPT WHERE OTHERWISE INDICATED.
3. CAPACITOR VALUES ARE IN μF UNLESS OTHERWISE INDICATED. P=PF
4. ALL CAPACITORS ARE 50VOLTS EXCEPT WHERE OTHERWISE INDICATED.
5. VOLTAGES AND WAVEFORMS MEASURED UNDER FOLLOWING CONDITIONS.
   INPUT SIGNAL IS STANDARD COLOR BAR CONTRAST CONTROL IS 75% AND CONTROL EXCEPT CONTRAST ARE CENTER.
6. Ⓗ..... HORIZONTAL RATE. Ⓥ..... VERTICAL RATE.

WARNING

REPLACEMENT PARTS WHICH HAVE SPECIAL SAFTY CHARACTERISTICS ARE IDENTIFIED BY ⚠ SHADING ON THE SCHEMATICS.
REPLACE THESE CRITICAL COMPONENTS WITH RECOMMENDED REPLACEMENT PARTS.
DON'T DEGRADE THE SAFETY OF THE SET THROUGH IMPROPER SERVICING.

B-CRT OUT PWB WAVE FORM

G-CRTOUT PWB (PWC-4192B)

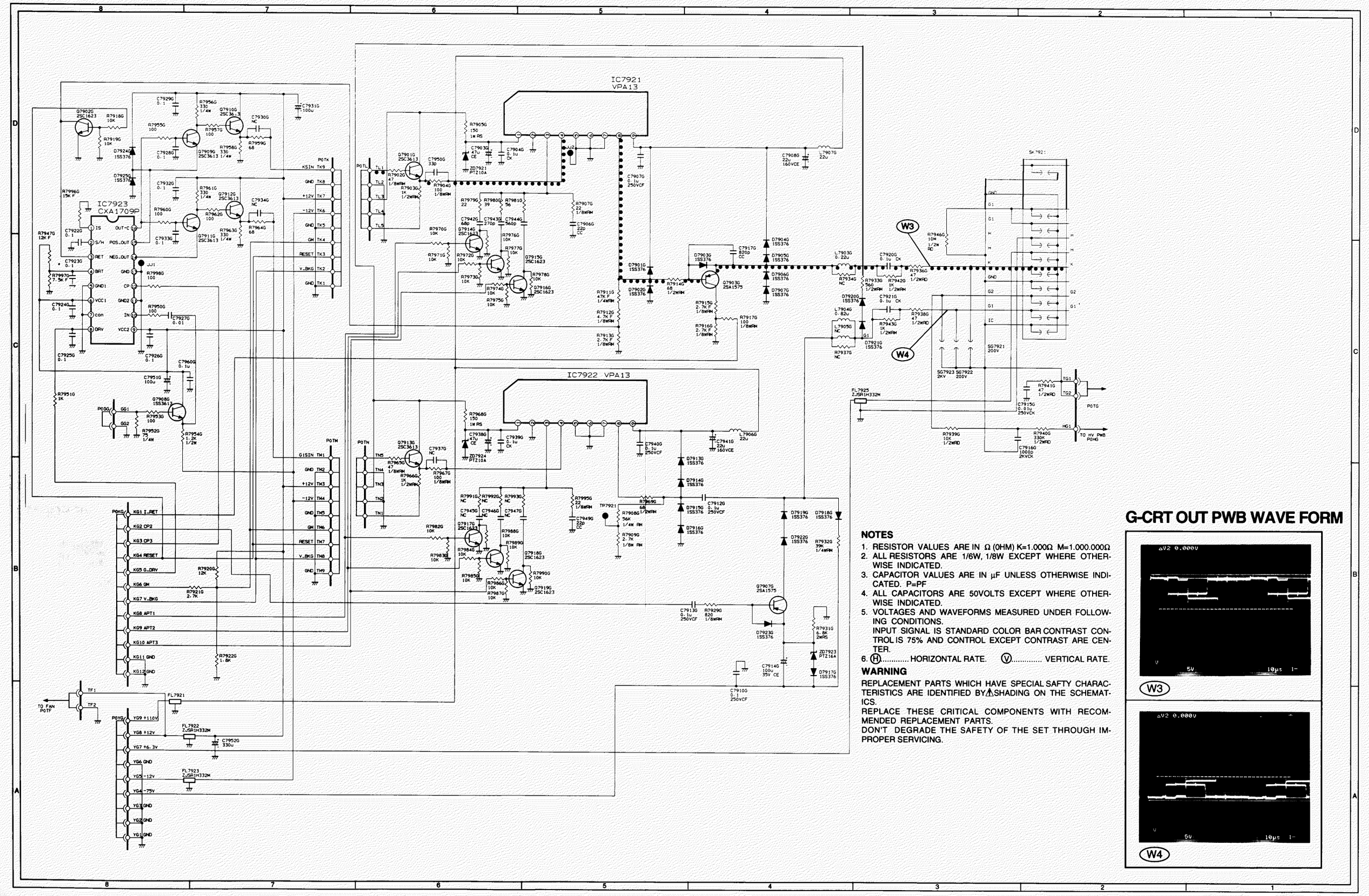

NOTES

1. RESISTOR VALUES ARE IN Ω (OHM) K=1.000Ω M=1.000.000Ω
2. ALL RESISTORS ARE 1/6W, 1/8W EXCEPT WHERE OTHERWISE INDICATED.
3. CAPACITOR VALUES ARE IN μF UNLESS OTHERWISE INDICATED. P=PF
4. ALL CAPACITORS ARE 50VOLTS EXCEPT WHERE OTHERWISE INDICATED.
5. VOLTAGES AND WAVEFORMS MEASURED UNDER FOLLOWING CONDITIONS.
   INPUT SIGNAL IS STANDARD COLOR BAR CONTRAST CONTROL IS 75% AND CONTROL EXCEPT CONTRAST ARE CENTER.
6. Ⓗ..... HORIZONTAL RATE. Ⓥ..... VERTICAL RATE.

WARNING

REPLACEMENT PARTS WHICH HAVE SPECIAL SAFTY CHARACTERISTICS ARE IDENTIFIED BY⚠SHADING ON THE SCHEMATICS.
REPLACE THESE CRITICAL COMPONENTS WITH RECOMMENDED REPLACEMENT PARTS.
DON'T DEGRADE THE SAFETY OF THE SET THROUGH IMPROPER SERVICING.

G-CRT OUT PWB WAVE FORM

R-CRTOUT PWB (PWC-4192A)

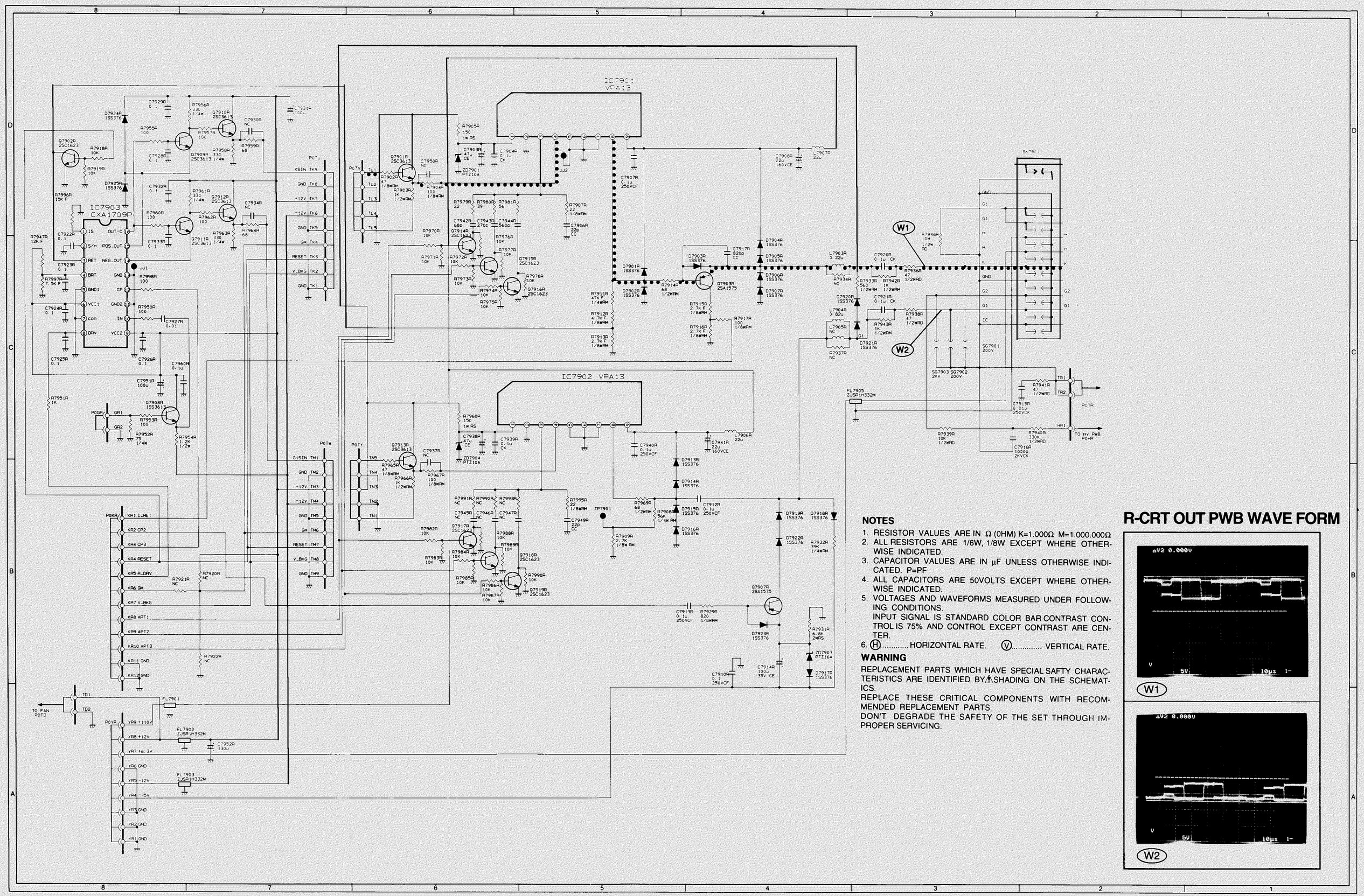

NOTES

1. RESISTOR VALUES ARE IN Ω (OHM) K=1.000Ω M=1.000.000Ω
2. ALL RESISTORS ARE 1/6W, 1/8W EXCEPT WHERE OTHERWISE INDICATED.
3. CAPACITOR VALUES ARE IN μF UNLESS OTHERWISE INDICATED. P=PF
4. ALL CAPACITORS ARE 50VOLTS EXCEPT WHERE OTHERWISE INDICATED.
5. VOLTAGES AND WAVEFORMS MEASURED UNDER FOLLOWING CONDITIONS.
   INPUT SIGNAL IS STANDARD COLOR BAR CONTRAST CONTROL IS 75% AND CONTROL EXCEPT CONTRAST ARE CENTER.
6. Ⓗ..... HORIZONTAL RATE. Ⓥ..... VERTICAL RATE.

WARNING

REPLACEMENT PARTS WHICH HAVE SPECIAL SAFTY CHARACTERISTICS ARE IDENTIFIED BY ⚠ SHADING ON THE SCHEMATICS.
REPLACE THESE CRITICAL COMPONENTS WITH RECOMMENDED REPLACEMENT PARTS.
DON'T DEGRADE THE SAFETY OF THE SET THROUGH IMPROPER SERVICING.

R-CRT OUT PWB WAVE FORM

B-CRT OUT PWB (PWC-4192C) PARTS SIDE

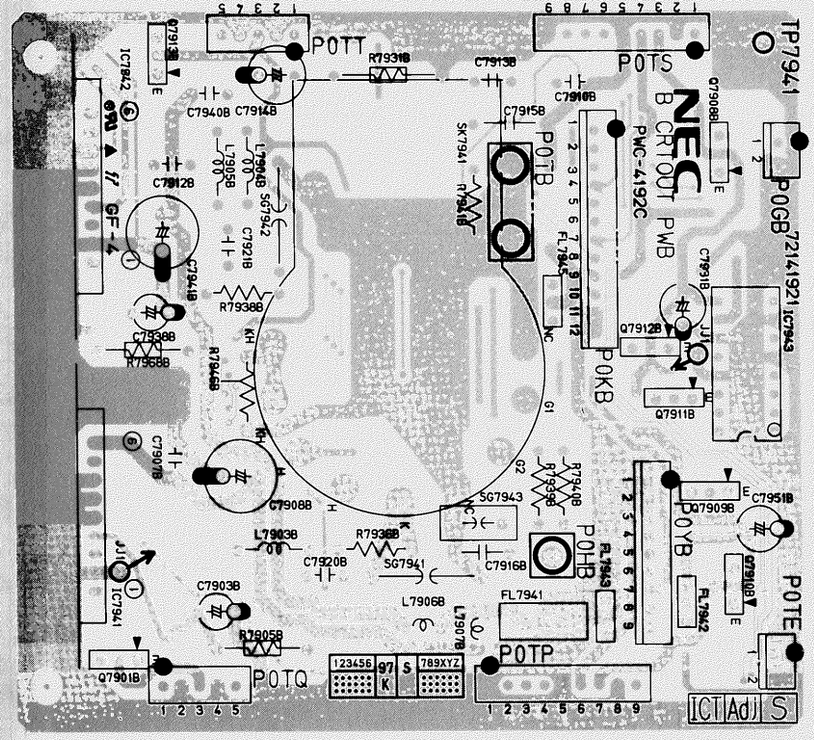

G-CRT OUT PWB (PWC-4192B)

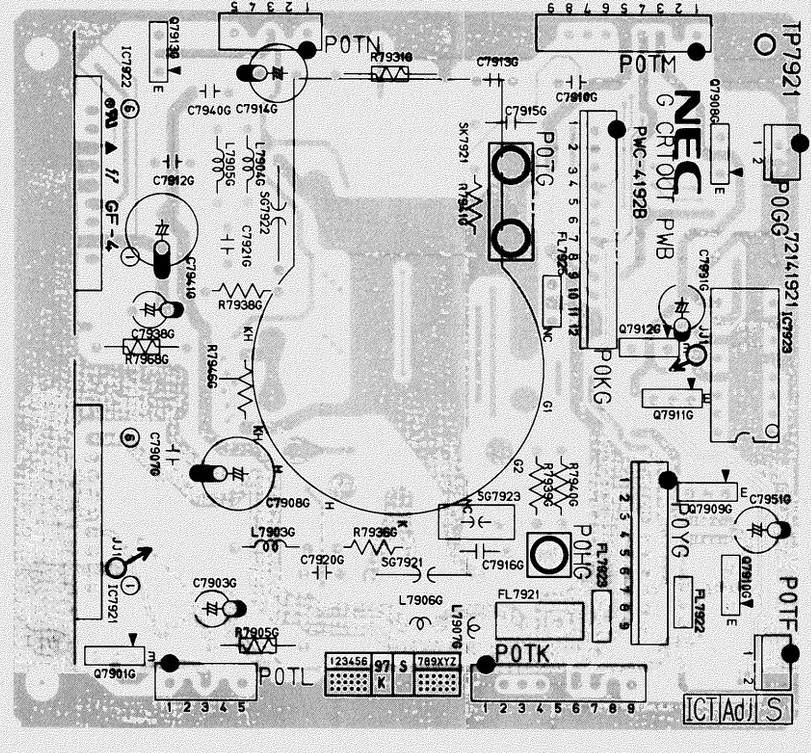

R-CRT OUT PWB (PWC-4192A)

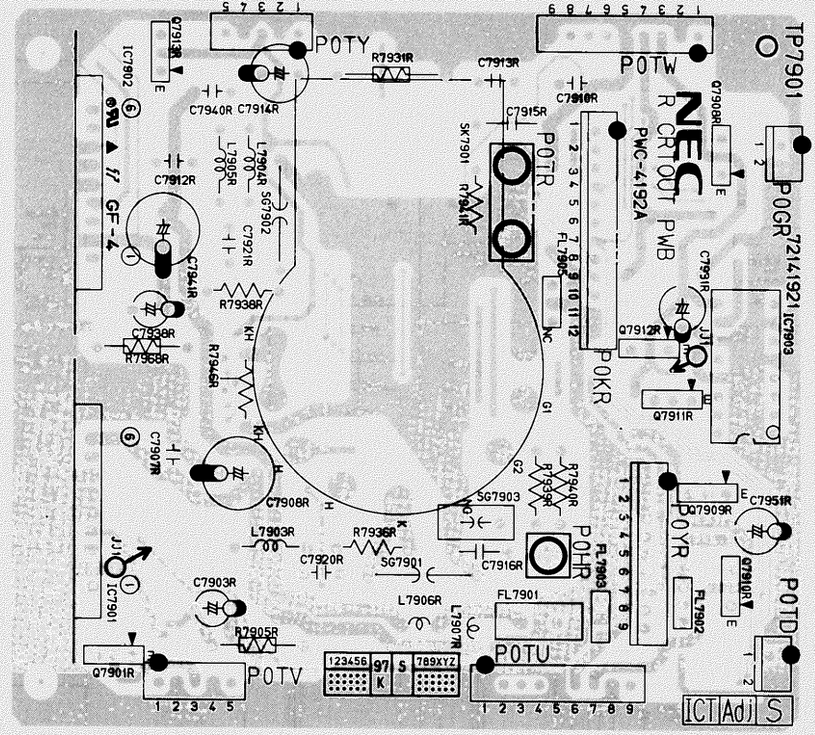

B-CRT OUT PWB (PWC-4192C) SOLDER SIDE

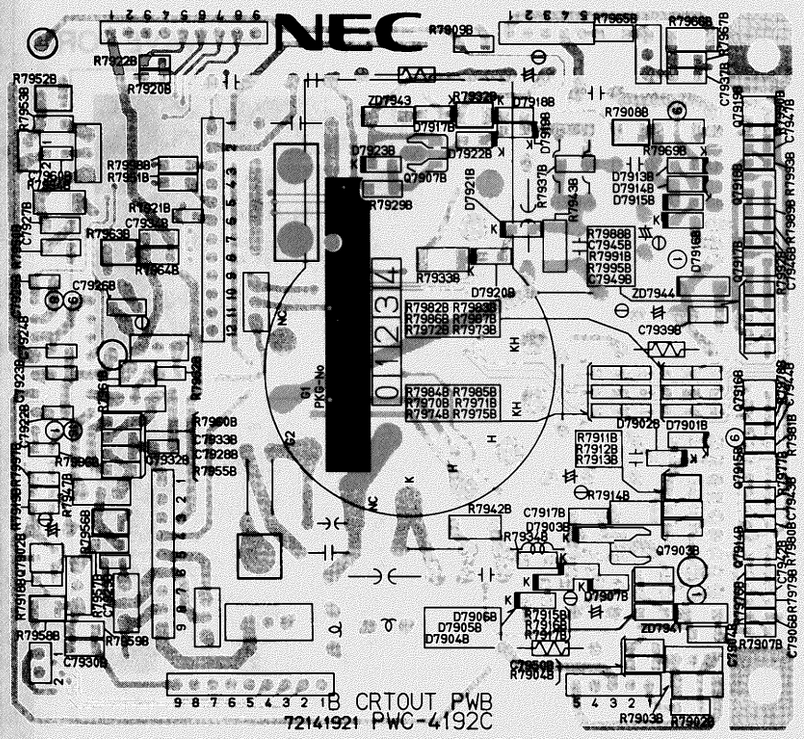

G-CRT OUT PWB (PWC-4192B)

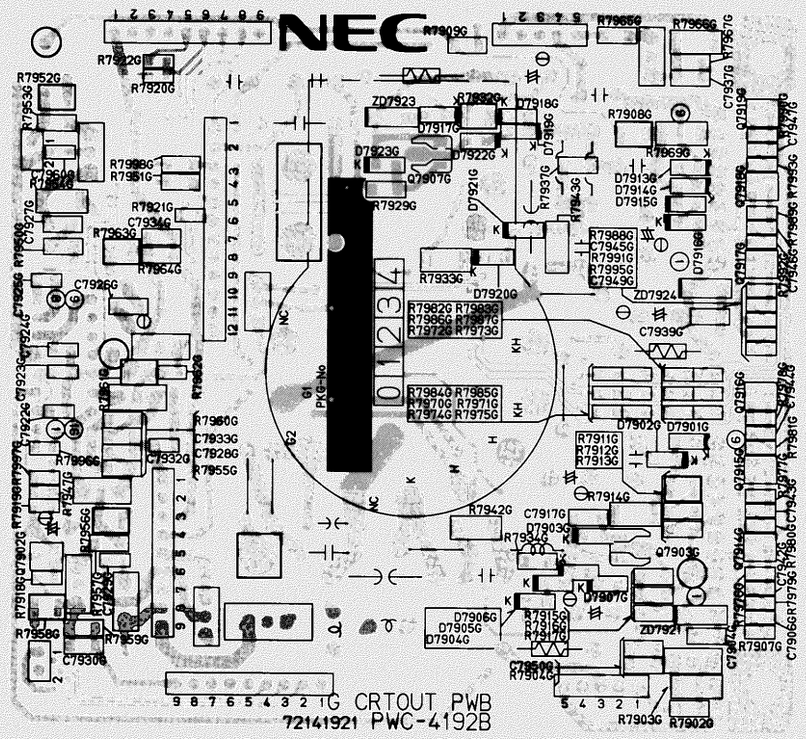

R-CRT OUT PWB (PWC-4192A)

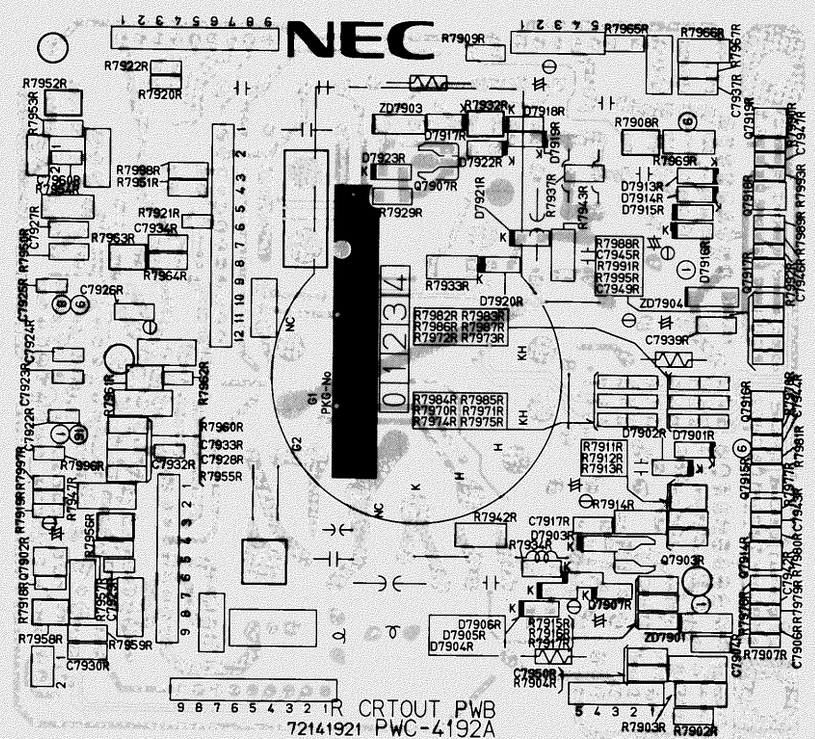

G-K-AMP PWB (PWC-4198A)

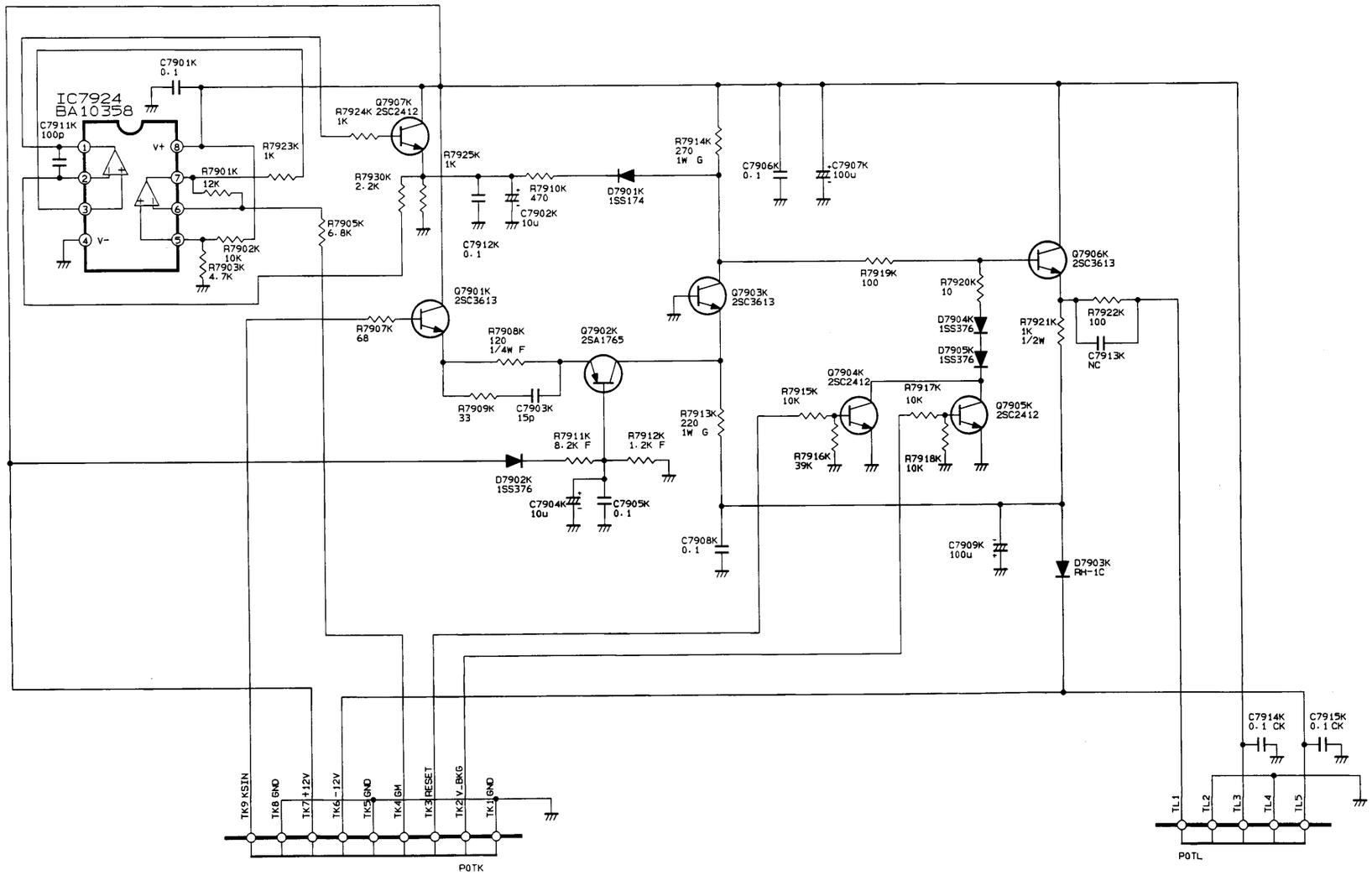

G-K-AMP PWB (PWC-4198A) PARTS SIDE

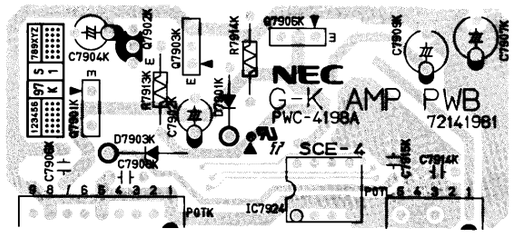

SOLDER SIDE

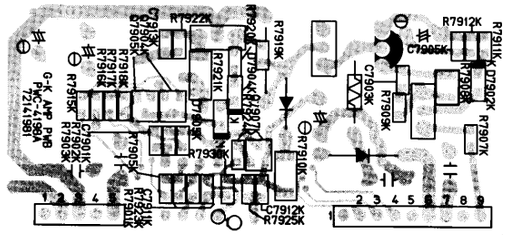

NOTES

1. RESISTOR VALUES ARE IN Ω (OHM) K=1.000Ω M=1.000.000Ω
2. ALL RESISTORS ARE 1/10W EXCEPT WHERE OTHERWISE INDICATED.
3. CAPACITOR VALUES ARE IN μF UNLESS OTHERWISE INDICATED. P=PF
4. ALL CAPACITORS ARE 50VOLTS EXCEPT WHERE OTHERWISE INDICATED.
5. VOLTAGES AND WAVEFORMS MEASURED UNDER FOLLOWING CONDITIONS.
   INPUT SIGNAL IS STANDARD COLOR BAR CONTRAST CONTROL IS 75% AND CONTROL EXCEPT CONTRAST ARE CENTER.
6. Ⓗ..... HORIZONTAL RATE. Ⓥ..... VERTICAL RATE.

WARNING

REPLACEMENT PARTS WHICH HAVE SPECIAL SAFTY CHARACTERISTICS ARE IDENTIFIED BY⚠SHADING ON THE SCHEMATICS.
REPLACE THESE CRITICAL COMPONENTS WITH RECOMMENDED REPLACEMENT PARTS.
DON'T DEGRADE THE SAFETY OF THE SET THROUGH IMPROPER SERVICING.

G-G1-AMP PWB (PWC-4198B)

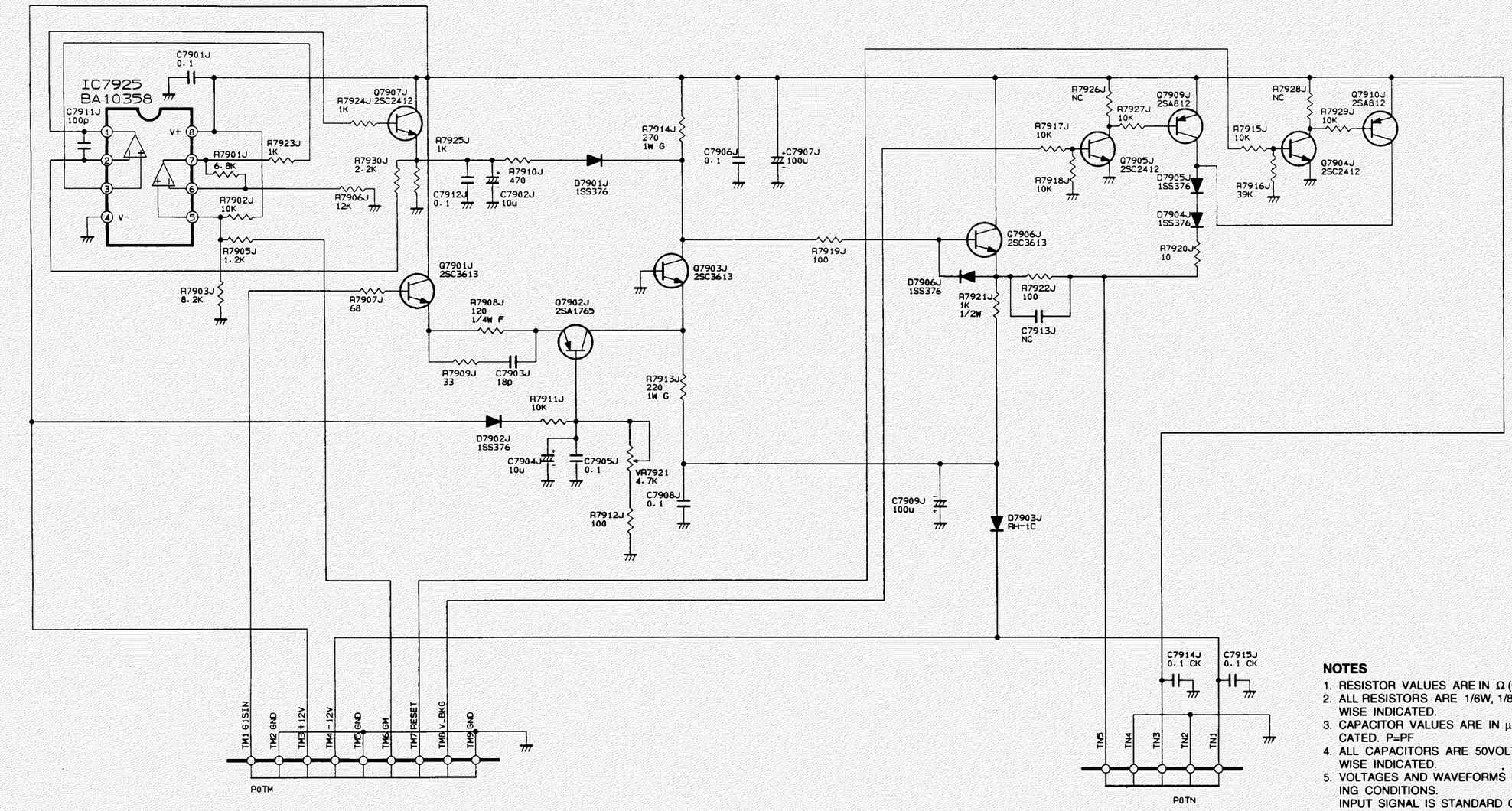

G-G1-AMP PWB (PWC-4198B) PARTS SIDE

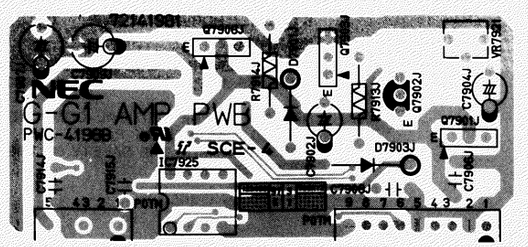

SOLDER SIDE

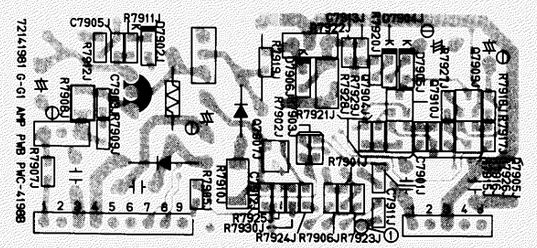

NOTES

1. RESISTOR VALUES ARE IN Ω (OHM) K=1.000Ω M=1.000.000Ω
2. ALL RESISTORS ARE 1/6W, 1/8W EXCEPT WHERE OTHERWISE INDICATED.
3. CAPACITOR VALUES ARE IN μF UNLESS OTHERWISE INDICATED. P=PF
4. ALL CAPACITORS ARE 50VOLTS EXCEPT WHERE OTHERWISE INDICATED.
5. VOLTAGES AND WAVEFORMS MEASURED UNDER FOLLOWING CONDITIONS.
   INPUT SIGNAL IS STANDARD COLOR BAR CONTRAST CONTROL IS 75% AND CONTROL EXCEPT CONTRAST ARE CENTER.
6. Ⓗ..... HORIZONTAL RATE. Ⓥ..... VERTICAL RATE.

WARNING

REPLACEMENT PARTS WHICH HAVE SPECIAL SAFTY CHARACTERISTICS ARE IDENTIFIED BY ⚠ SHADING ON THE SCHEMATICS.
REPLACE THESE CRITICAL COMPONENTS WITH RECOMMENDED REPLACEMENT PARTS.
DON'T DEGRADE THE SAFETY OF THE SET THROUGH IMPROPER SERVICING.

R-K-AMP PWB (PWC-4198C)

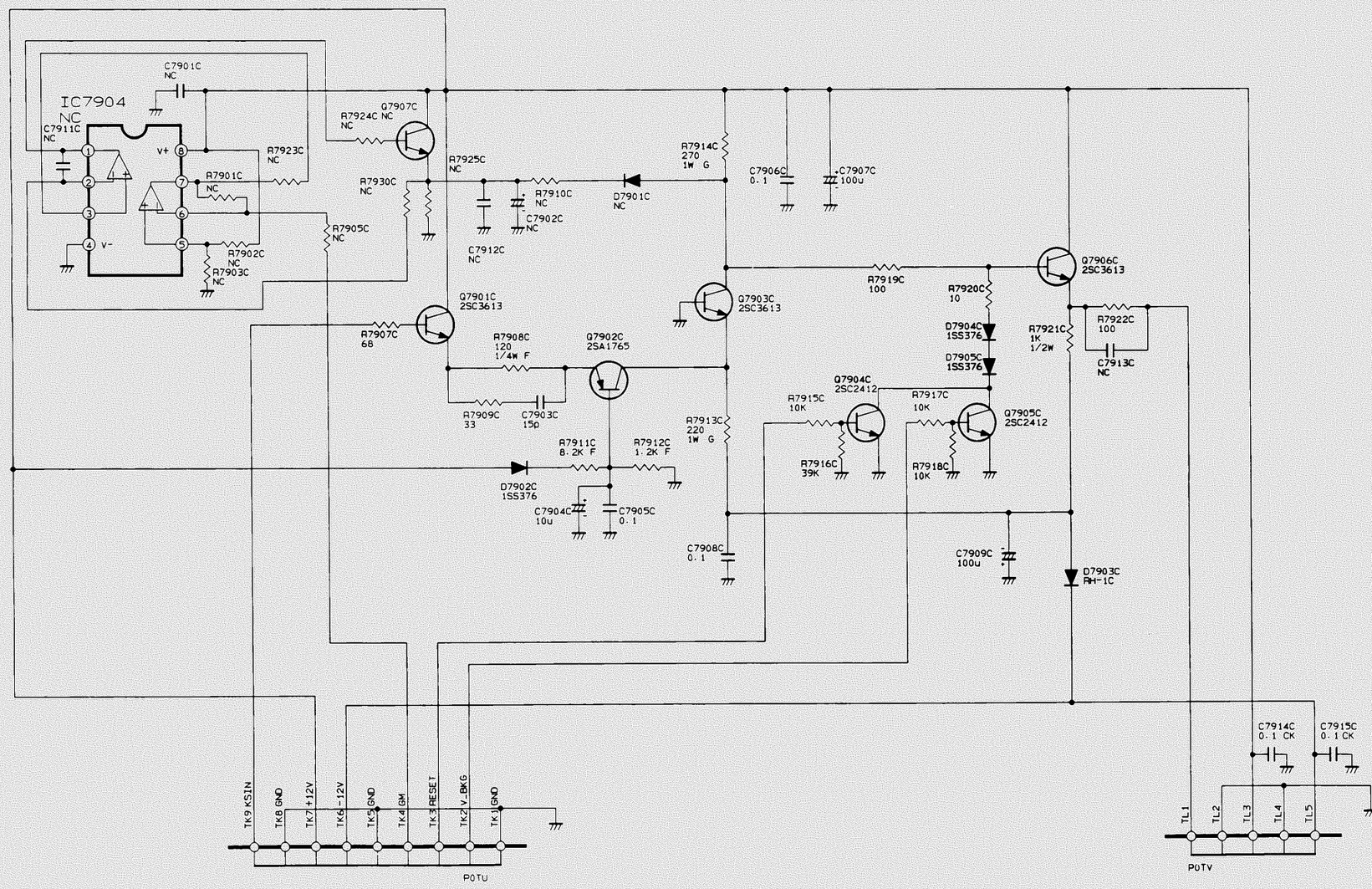

R-K-AMP PWB (PWC-4198C) PARTS SIDE

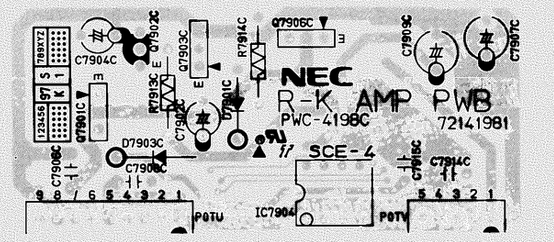

SOLDER SIDE

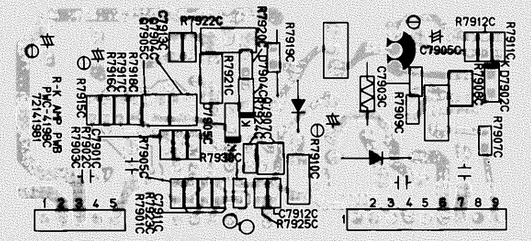

NOTES

1. RESISTOR VALUES ARE IN Ω (OHM) K=1.000Ω M=1.000.000Ω
2. ALL RESISTORS ARE 1/10W EXCEPT WHERE OTHERWISE INDICATED.
3. CAPACITOR VALUES ARE IN μF UNLESS OTHERWISE INDICATED. P=PF
4. ALL CAPACITORS ARE 50VOLTS EXCEPT WHERE OTHERWISE INDICATED.
5. VOLTAGES AND WAVEFORMS MEASURED UNDER FOLLOWING CONDITIONS.
   INPUT SIGNAL IS STANDARD COLOR BAR CONTRAST CONTROL IS 75% AND CONTROL EXCEPT CONTRAST ARE CENTER.
6. Ⓗ..... HORIZONTAL RATE. Ⓥ..... VERTICAL RATE.

WARNING

REPLACEMENT PARTS WHICH HAVE SPECIAL SAFTY CHARACTERISTICS ARE IDENTIFIED BY ⚠ SHADING ON THE SCHEMATICS.
REPLACE THESE CRITICAL COMPONENTS WITH RECOMMENDED REPLACEMENT PARTS.
DON'T DEGRADE THE SAFETY OF THE SET THROUGH IMPROPER SERVICING.

R-G1-AMP PWB (PWC-4198D)

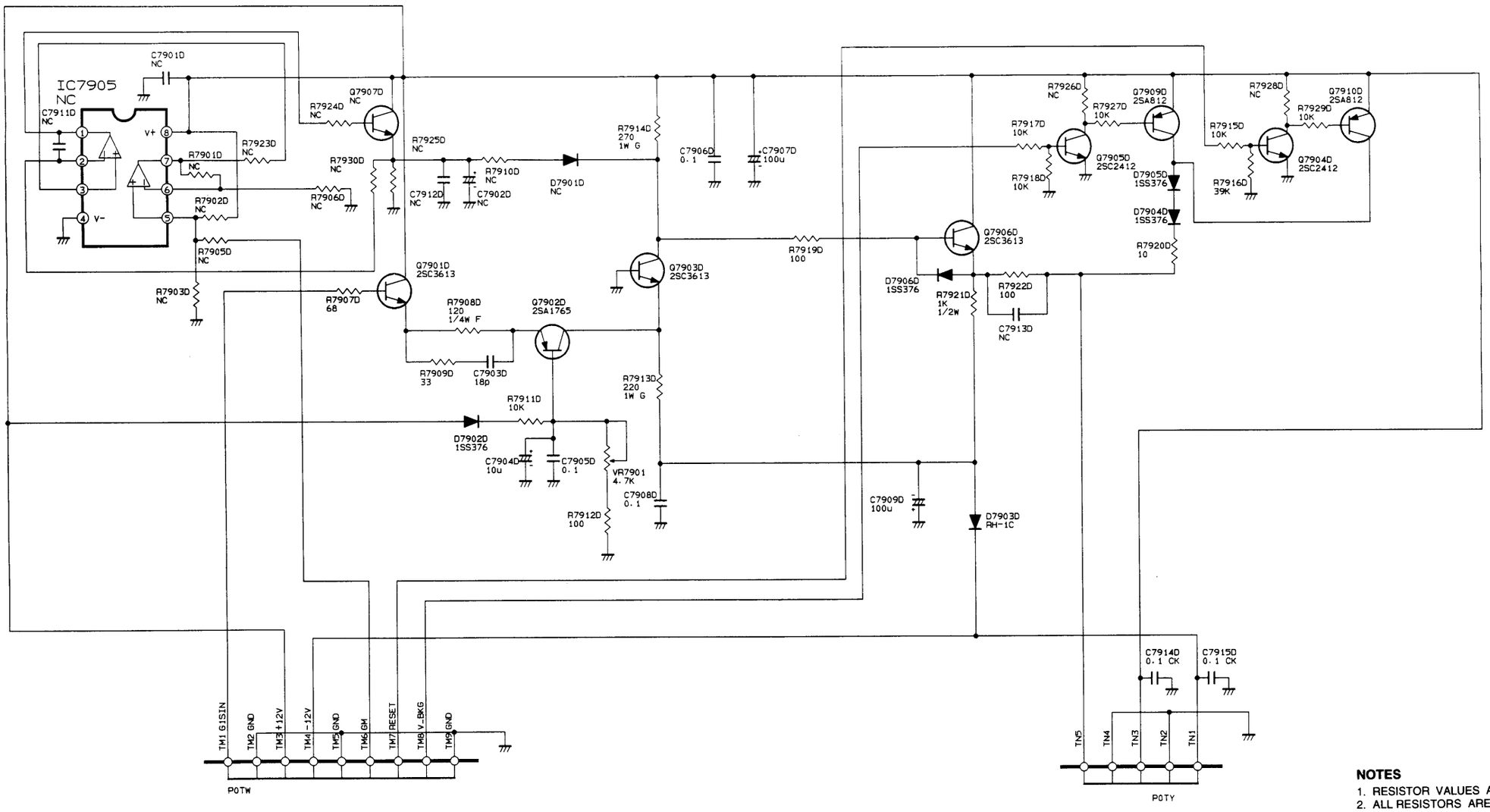

R-G1-AMP PWB (PWC-4198D)
PARTS SIDE

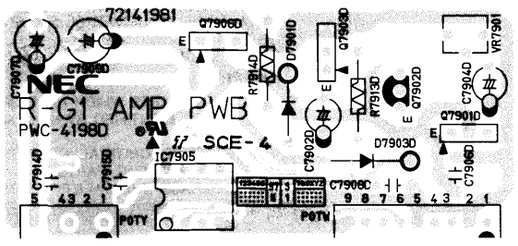

SOLDER SIDE

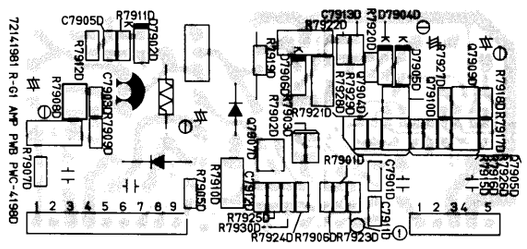

NOTES

1. RESISTOR VALUES ARE IN Ω (OHM) K=1.000Ω M=1.000.000Ω
2. ALL RESISTORS ARE 1/6W, 1/8W EXCEPT WHERE OTHERWISE INDICATED.
3. CAPACITOR VALUES ARE IN μF UNLESS OTHERWISE INDICATED. P=PF
4. ALL CAPACITORS ARE 50VOLTS EXCEPT WHERE OTHERWISE INDICATED.
5. VOLTAGES AND WAVEFORMS MEASURED UNDER FOLLOWING CONDITIONS.
   INPUT SIGNAL IS STANDARD COLOR BAR CONTRAST CONTROL IS 75% AND CONTROL EXCEPT CONTRAST ARE CENTER.
6. Ⓗ..... HORIZONTAL RATE. Ⓥ..... VERTICAL RATE.

WARNING

REPLACEMENT PARTS WHICH HAVE SPECIAL SAFTY CHARACTERISTICS ARE IDENTIFIED BY ⚠ SHADING ON THE SCHEMATICS.
REPLACE THESE CRITICAL COMPONENTS WITH RECOMMENDED REPLACEMENT PARTS.
DON'T DEGRADE THE SAFETY OF THE SET THROUGH IMPROPER SERVICING.

B-K-AMP PWB (PWC-4198E)

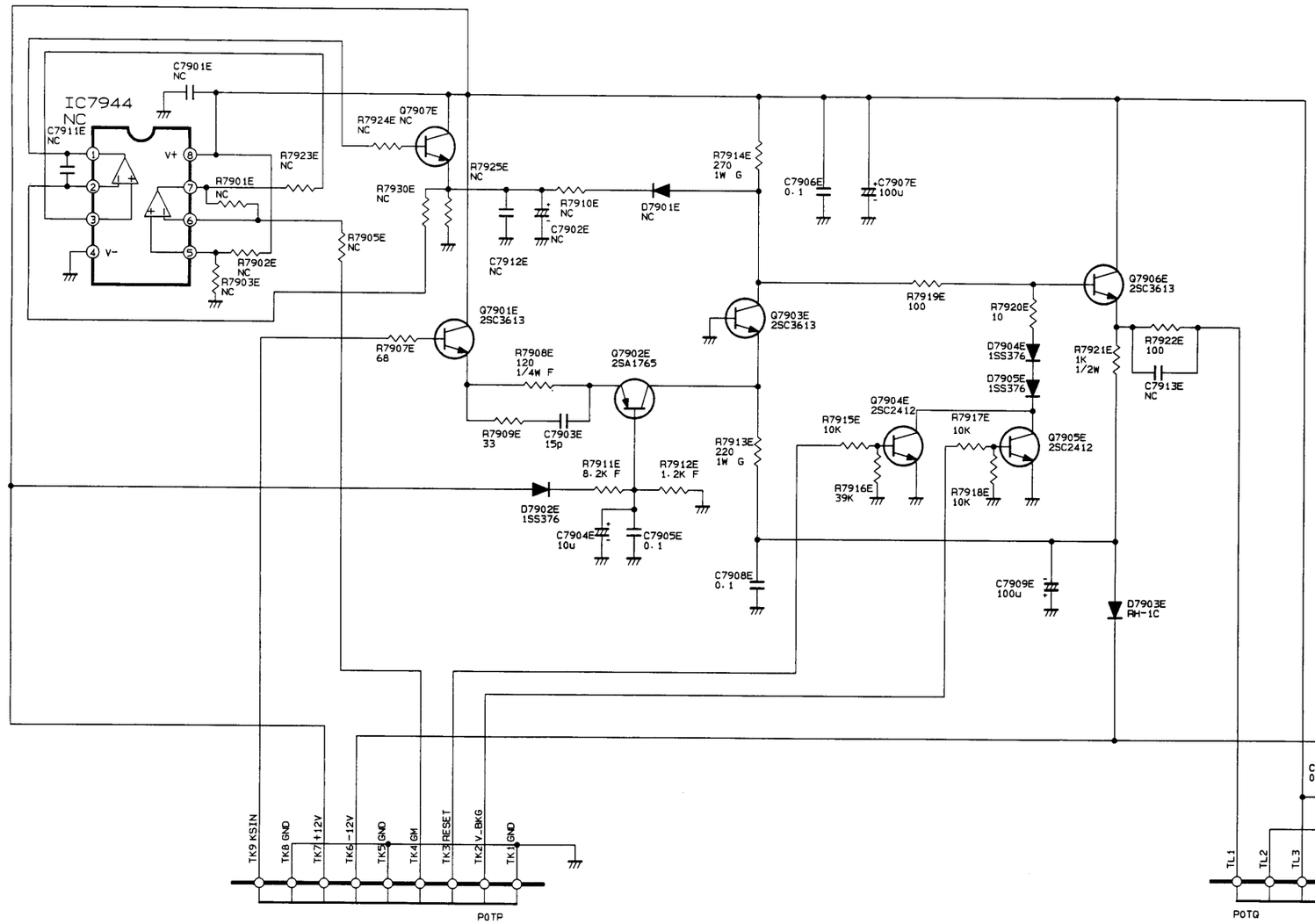

B-K-AMP PWB (PWC-4198E) PARTS SIDE

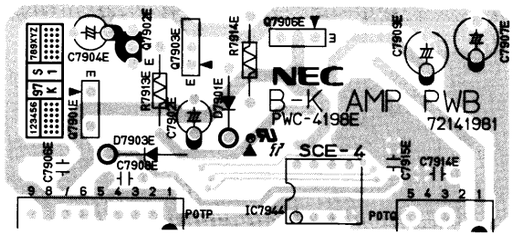

SOLDER SIDE

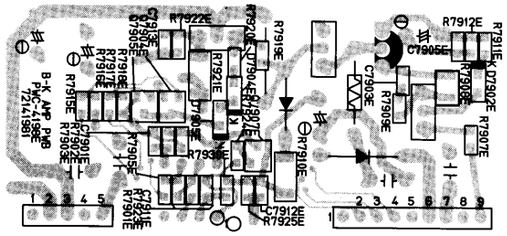

NOTES

1. RESISTOR VALUES ARE IN Ω (OHM) K=1.000Ω M=1.000.000Ω
2. ALL RESISTORS ARE 1/6W, 1/8W EXCEPT WHERE OTHERWISE INDICATED.
3. CAPACITOR VALUES ARE IN μF UNLESS OTHERWISE INDICATED. P=PF
4. ALL CAPACITORS ARE 50VOLTS EXCEPT WHERE OTHERWISE INDICATED.
5. VOLTAGES AND WAVEFORMS MEASURED UNDER FOLLOWING CONDITIONS.
   INPUT SIGNAL IS STANDARD COLOR BAR CONTRAST CONTROL IS 75% AND CONTROL EXCEPT CONTRAST ARE CENTER.
6. Ⓗ..... HORIZONTAL RATE. Ⓥ..... VERTICAL RATE.

WARNING

REPLACEMENT PARTS WHICH HAVE SPECIAL SAFTY CHARACTERISTICS ARE IDENTIFIED BY ⚠ SHADING ON THE SCHEMATICS.
REPLACE THESE CRITICAL COMPONENTS WITH RECOMMENDED REPLACEMENT PARTS.
DON'T DEGRADE THE SAFETY OF THE SET THROUGH IMPROPER SERVICING.

B-G1-AMP PWB (PWC-4198F)

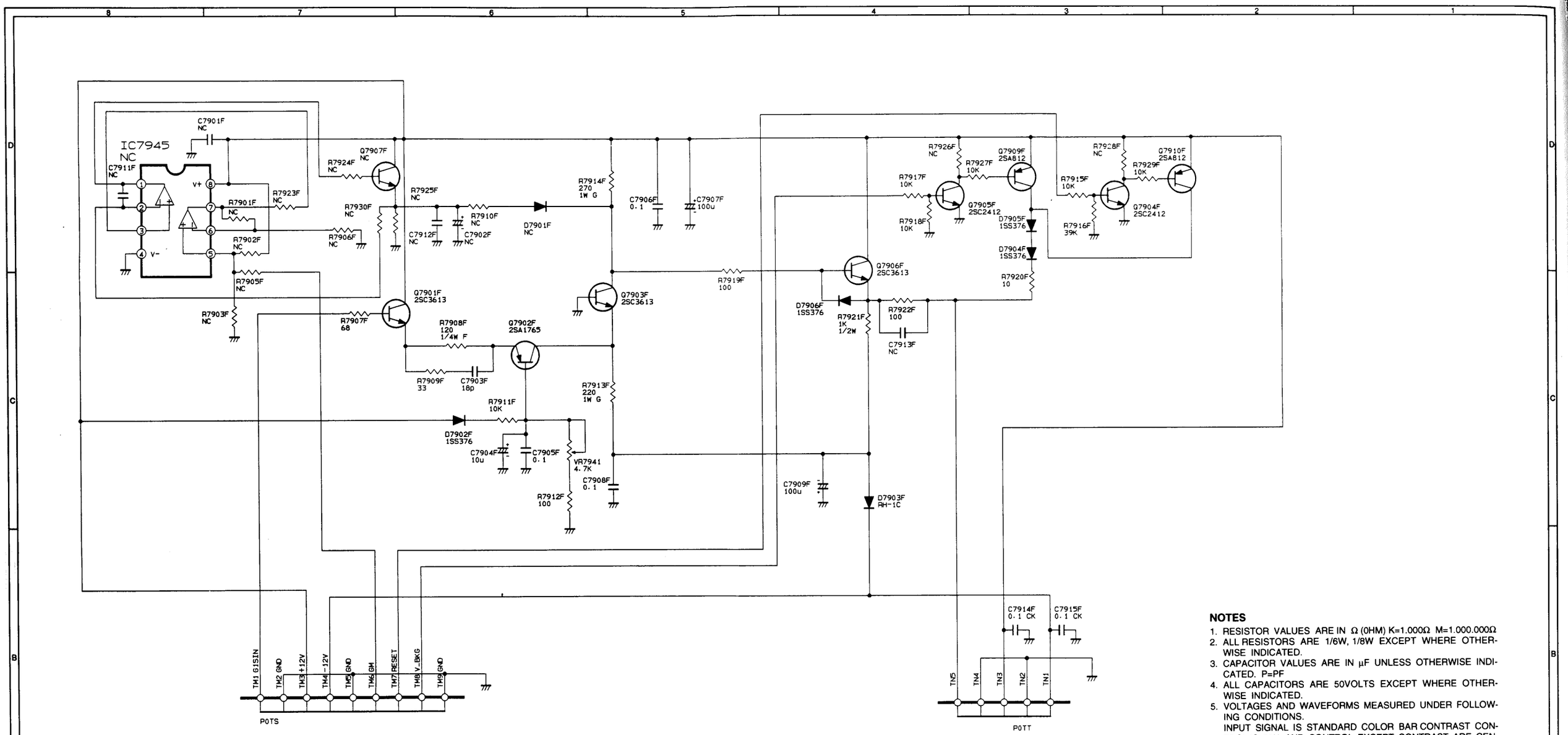

B-G1-AMP PWB (PWC-4198F) PARTS SIDE

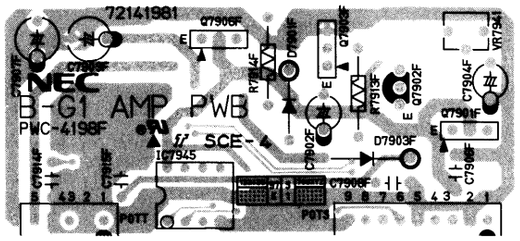

SOLDER SIDE

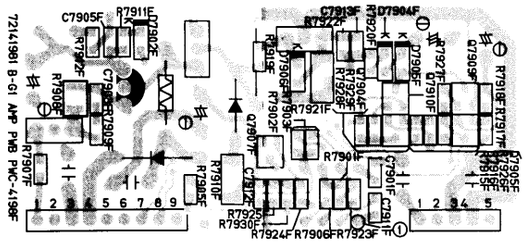

NOTES

1. RESISTOR VALUES ARE IN Ω (OHM) K=1.000Ω M=1.000.000Ω
2. ALL RESISTORS ARE 1/6W, 1/8W EXCEPT WHERE OTHERWISE INDICATED.
3. CAPACITOR VALUES ARE IN μF UNLESS OTHERWISE INDICATED. P=PF
4. ALL CAPACITORS ARE 50VOLTS EXCEPT WHERE OTHERWISE INDICATED.
5. VOLTAGES AND WAVEFORMS MEASURED UNDER FOLLOWING CONDITIONS.
   INPUT SIGNAL IS STANDARD COLOR BAR CONTRAST CONTROL IS 75% AND CONTROL EXCEPT CONTRAST ARE CENTER.
6. Ⓗ..... HORIZONTAL RATE. Ⓥ..... VERTICAL RATE.

WARNING

REPLACEMENT PARTS WHICH HAVE SPECIAL SAFTY CHARACTERISTICS ARE IDENTIFIED BY ⚠ SHADING ON THE SCHEMATICS.
REPLACE THESE CRITICAL COMPONENTS WITH RECOMMENDED REPLACEMENT PARTS.
DON'T DEGRADE THE SAFETY OF THE SET THROUGH IMPROPER SERVICING.

SYSTEM MOTHER PWB (PWC-4194 (A)) (1/3)

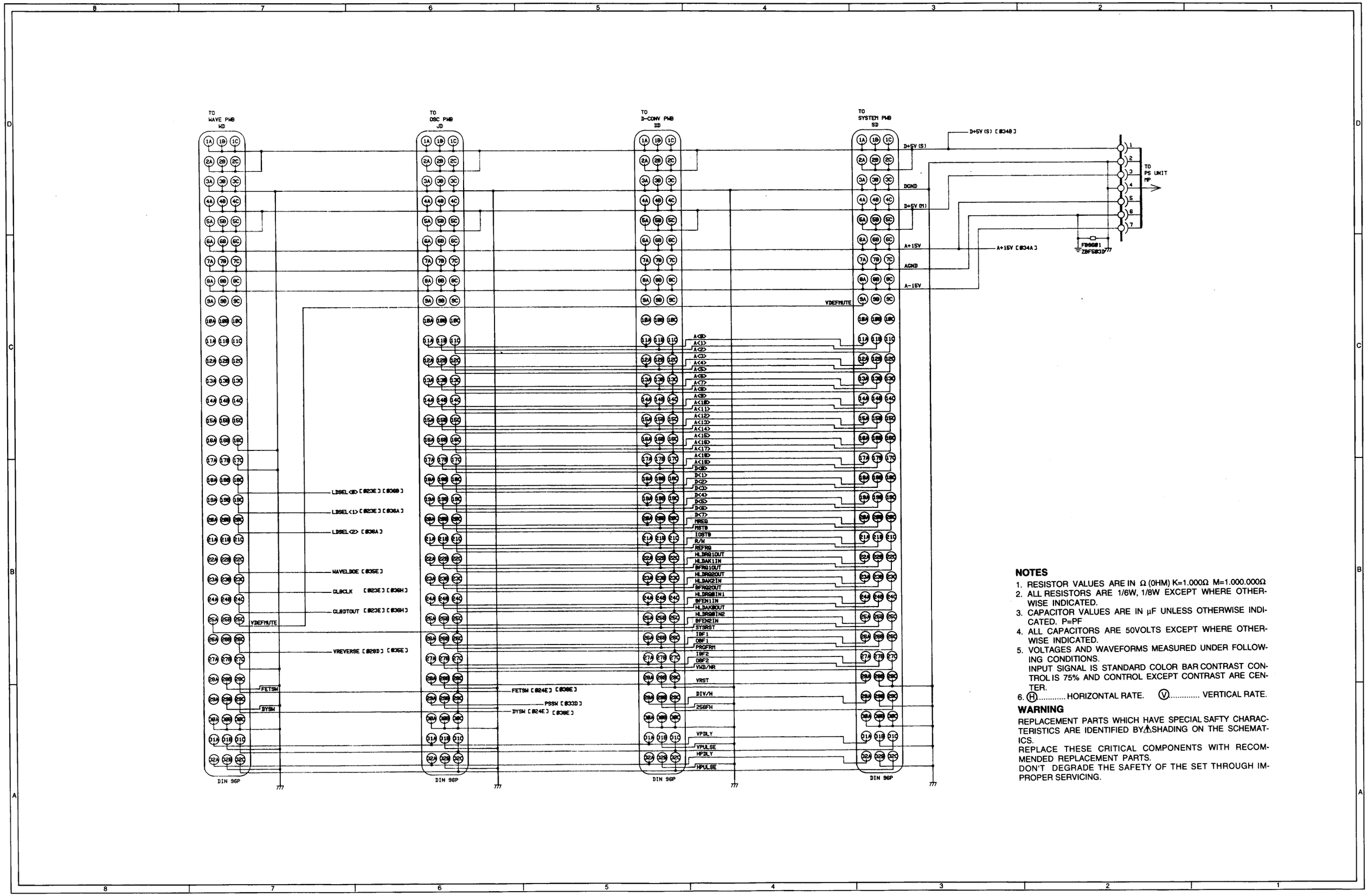

NOTES

1. RESISTOR VALUES ARE IN Ω (OHM) K=1.000Ω M=1.000.000Ω
2. ALL RESISTORS ARE 1/6W, 1/8W EXCEPT WHERE OTHERWISE INDICATED.
3. CAPACITOR VALUES ARE IN μF UNLESS OTHERWISE INDICATED. P=PF
4. ALL CAPACITORS ARE 50VOLTS EXCEPT WHERE OTHERWISE INDICATED.
5. VOLTAGES AND WAVEFORMS MEASURED UNDER FOLLOWING CONDITIONS.
   INPUT SIGNAL IS STANDARD COLOR BAR CONTRAST CONTROL IS 75% AND CONTROL EXCEPT CONTRAST ARE CENTER.
6. Ⓗ..... HORIZONTAL RATE. Ⓥ..... VERTICAL RATE.

WARNING

REPLACEMENT PARTS WHICH HAVE SPECIAL SAFTY CHARACTERISTICS ARE IDENTIFIED BY ⚠ SHADING ON THE SCHEMATICS.
REPLACE THESE CRITICAL COMPONENTS WITH RECOMMENDED REPLACEMENT PARTS.
DON'T DEGRADE THE SAFETY OF THE SET THROUGH IMPROPER SERVICING.

SYSTEM MOTHER PWB (PWC-4194 (A)) (2/3)

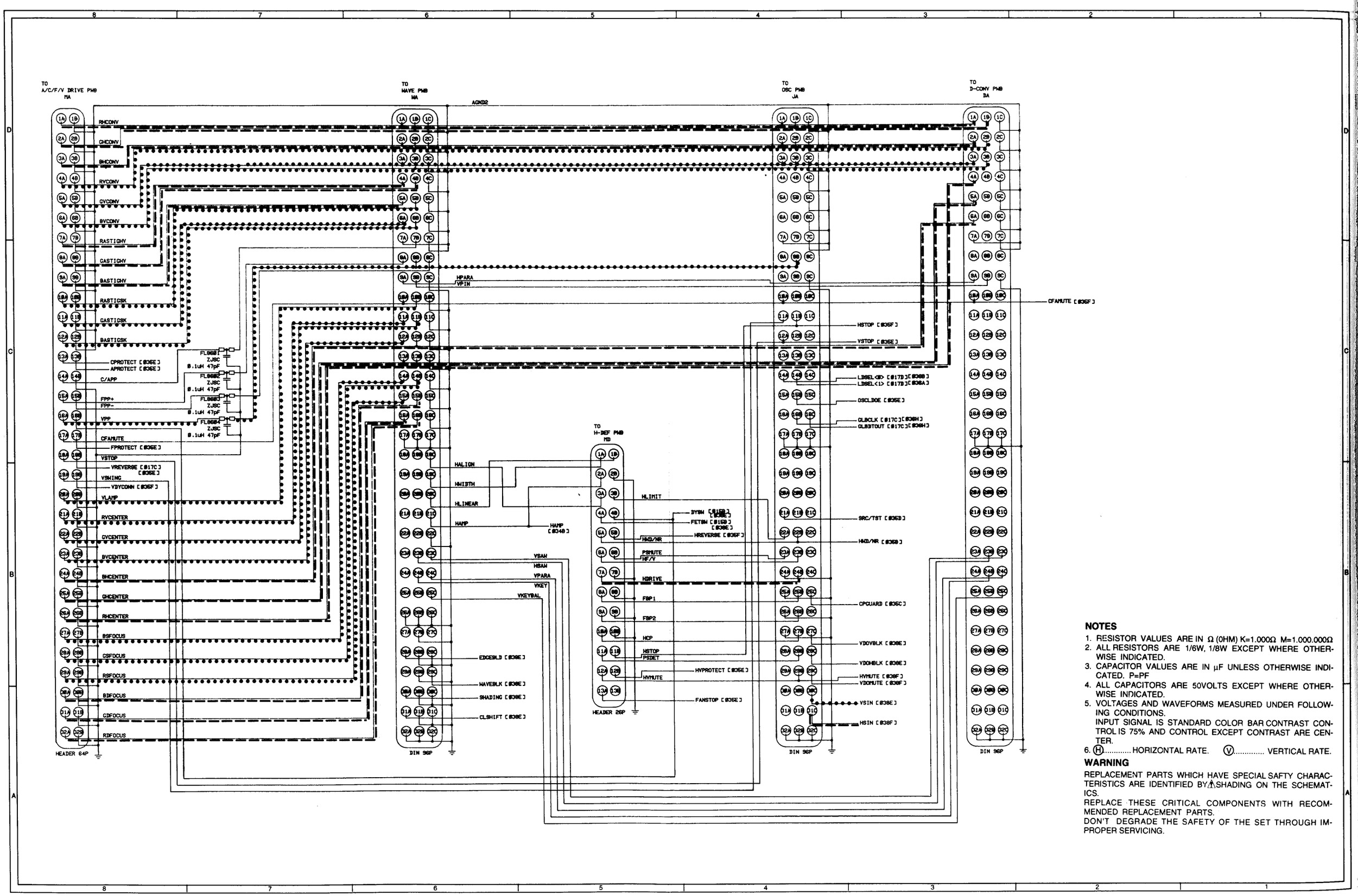

NOTES

1. RESISTOR VALUES ARE IN Ω (OHM) K=1.000Ω M=1.000.000Ω
2. ALL RESISTORS ARE 1/6W, 1/8W EXCEPT WHERE OTHERWISE INDICATED.
3. CAPACITOR VALUES ARE IN μF UNLESS OTHERWISE INDICATED. P=PF
4. ALL CAPACITORS ARE 50VOLTS EXCEPT WHERE OTHERWISE INDICATED.
5. VOLTAGES AND WAVEFORMS MEASURED UNDER FOLLOWING CONDITIONS.
   INPUT SIGNAL IS STANDARD COLOR BAR CONTRAST CONTROL IS 75% AND CONTROL EXCEPT CONTRAST ARE CENTER.
6. Ⓗ..... HORIZONTAL RATE. Ⓥ..... VERTICAL RATE.

WARNING

REPLACEMENT PARTS WHICH HAVE SPECIAL SAFTY CHARACTERISTICS ARE IDENTIFIED BY ⚠ SHADING ON THE SCHEMATICS.
REPLACE THESE CRITICAL COMPONENTS WITH RECOMMENDED REPLACEMENT PARTS.
DON'T DEGRADE THE SAFETY OF THE SET THROUGH IMPROPER SERVICING.

SYSTEM MOTHER PWB (PWC-4194 (A)) (3/3)

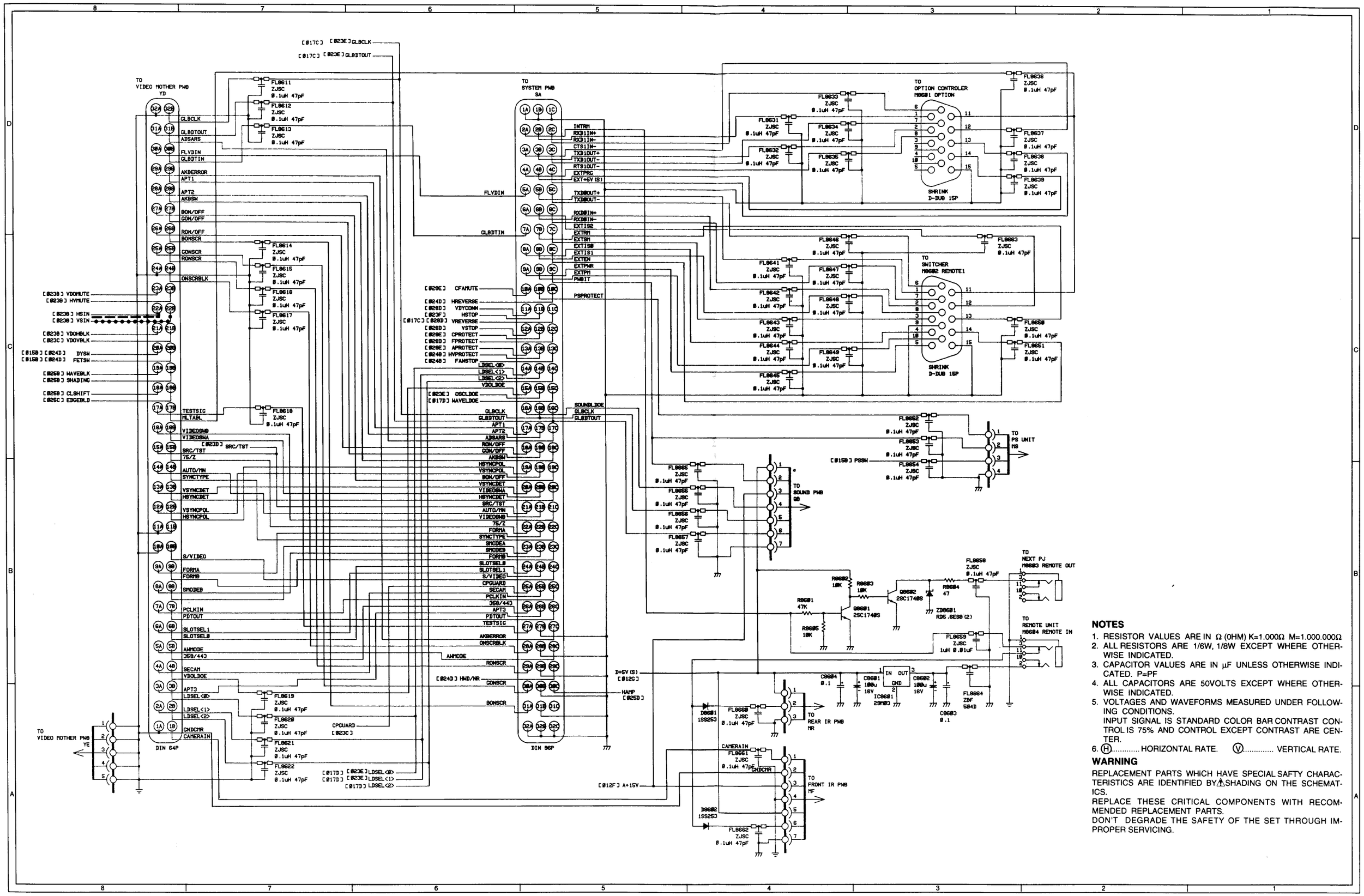

NOTES

1. RESISTOR VALUES ARE IN Ω (OHM) K=1.000Ω M=1.000.000Ω
2. ALL RESISTORS ARE 1/6W, 1/8W EXCEPT WHERE OTHERWISE INDICATED.
3. CAPACITOR VALUES ARE IN μF UNLESS OTHERWISE INDICATED. P=PF
4. ALL CAPACITORS ARE 50VOLTS EXCEPT WHERE OTHERWISE INDICATED.
5. VOLTAGES AND WAVEFORMS MEASURED UNDER FOLLOWING CONDITIONS.
   INPUT SIGNAL IS STANDARD COLOR BAR CONTRAST CONTROL IS 75% AND CONTROL EXCEPT CONTRAST ARE CENTER.
6. Ⓗ..... HORIZONTAL RATE. Ⓥ..... VERTICAL RATE.

WARNING

REPLACEMENT PARTS WHICH HAVE SPECIAL SAFTY CHARACTERISTICS ARE IDENTIFIED BY⚠SHADING ON THE SCHEMATICS.
REPLACE THESE CRITICAL COMPONENTS WITH RECOMMENDED REPLACEMENT PARTS.
DON'T DEGRADE THE SAFETY OF THE SET THROUGH IMPROPER SERVICING.

SYSTEM MOTHER PWB (PWC-4194 (A))
PARTS SIDE

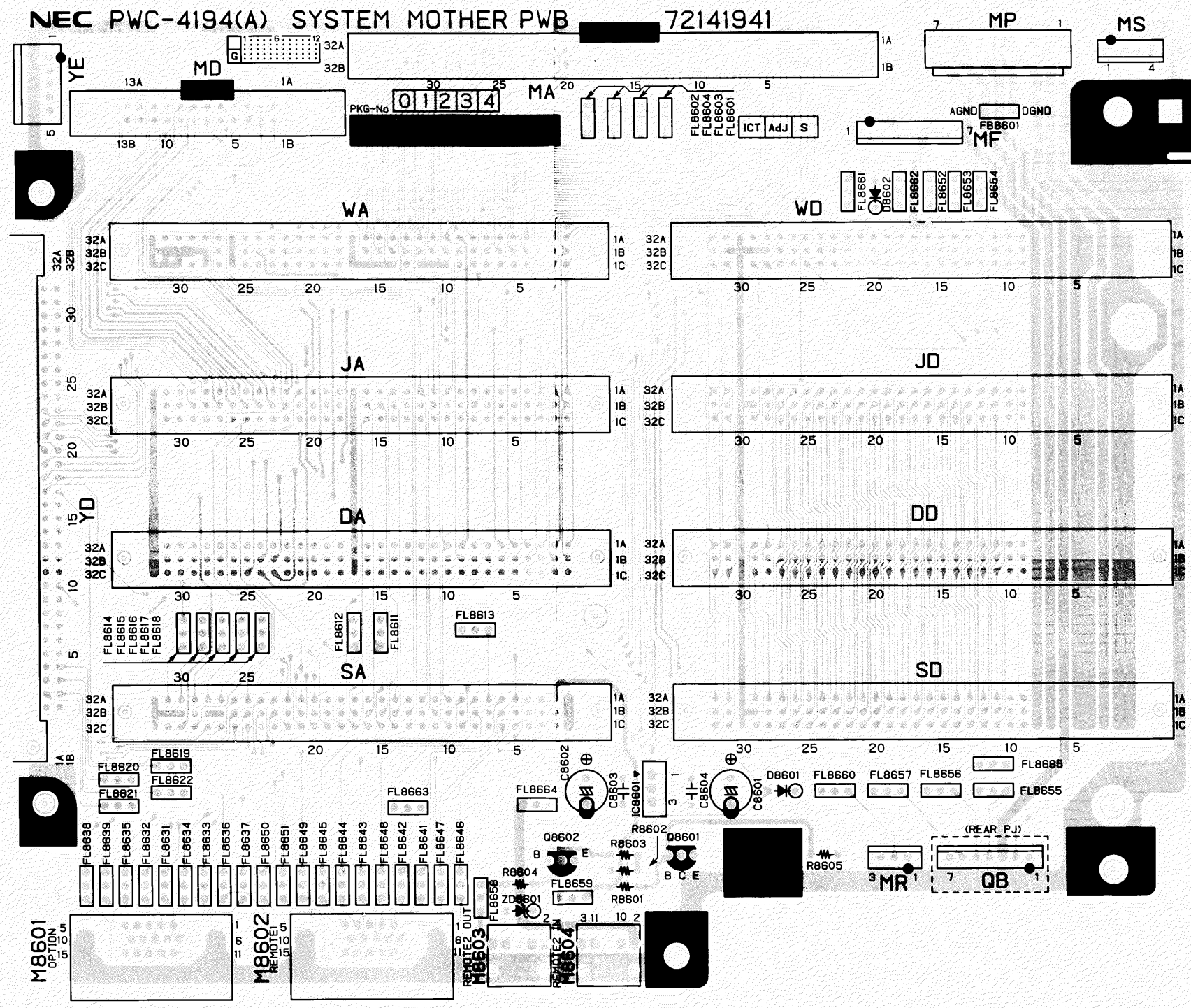

SYSTEM MOTHER PWB (PWC-4194 (A))
SOLDER SIDE

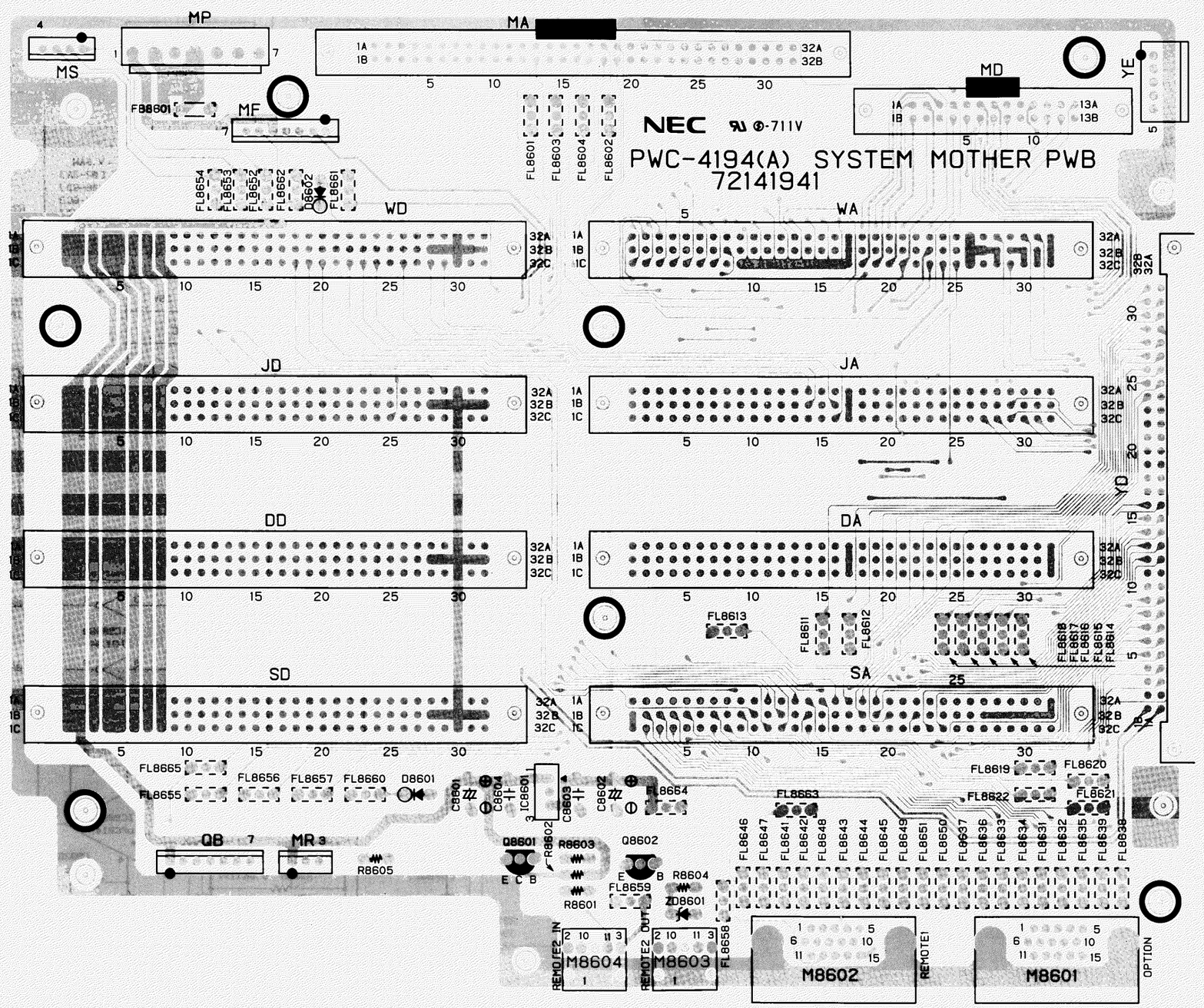

WAVE PWB (PWC-4193) (1/15)

NOTES

1. RESISTOR VALUES ARE IN Ω (OHM) K=1.000Ω M=1.000.000Ω
2. ALL RESISTORS ARE 1/6W, 1/8W EXCEPT WHERE OTHERWISE INDICATED.
3. CAPACITOR VALUES ARE IN μF UNLESS OTHERWISE INDICATED. P=PF
4. ALL CAPACITORS ARE 50VOLTS EXCEPT WHERE OTHERWISE INDICATED.
5. VOLTAGES AND WAVEFORMS MEASURED UNDER FOLLOWING CONDITIONS.
   INPUT SIGNAL IS STANDARD COLOR BAR CONTRAST CONTROL IS 75% AND CONTROL EXCEPT CONTRAST ARE CENTER.
6. Ⓗ..... HORIZONTAL RATE. Ⓥ..... VERTICAL RATE.

WARNING

REPLACEMENT PARTS WHICH HAVE SPECIAL SAFTY CHARACTERISTICS ARE IDENTIFIED BY ⚠ SHADING ON THE SCHEMATICS.
REPLACE THESE CRITICAL COMPONENTS WITH RECOMMENDED REPLACEMENT PARTS.
DON'T DEGRADE THE SAFETY OF THE SET THROUGH IMPROPER SERVICING.

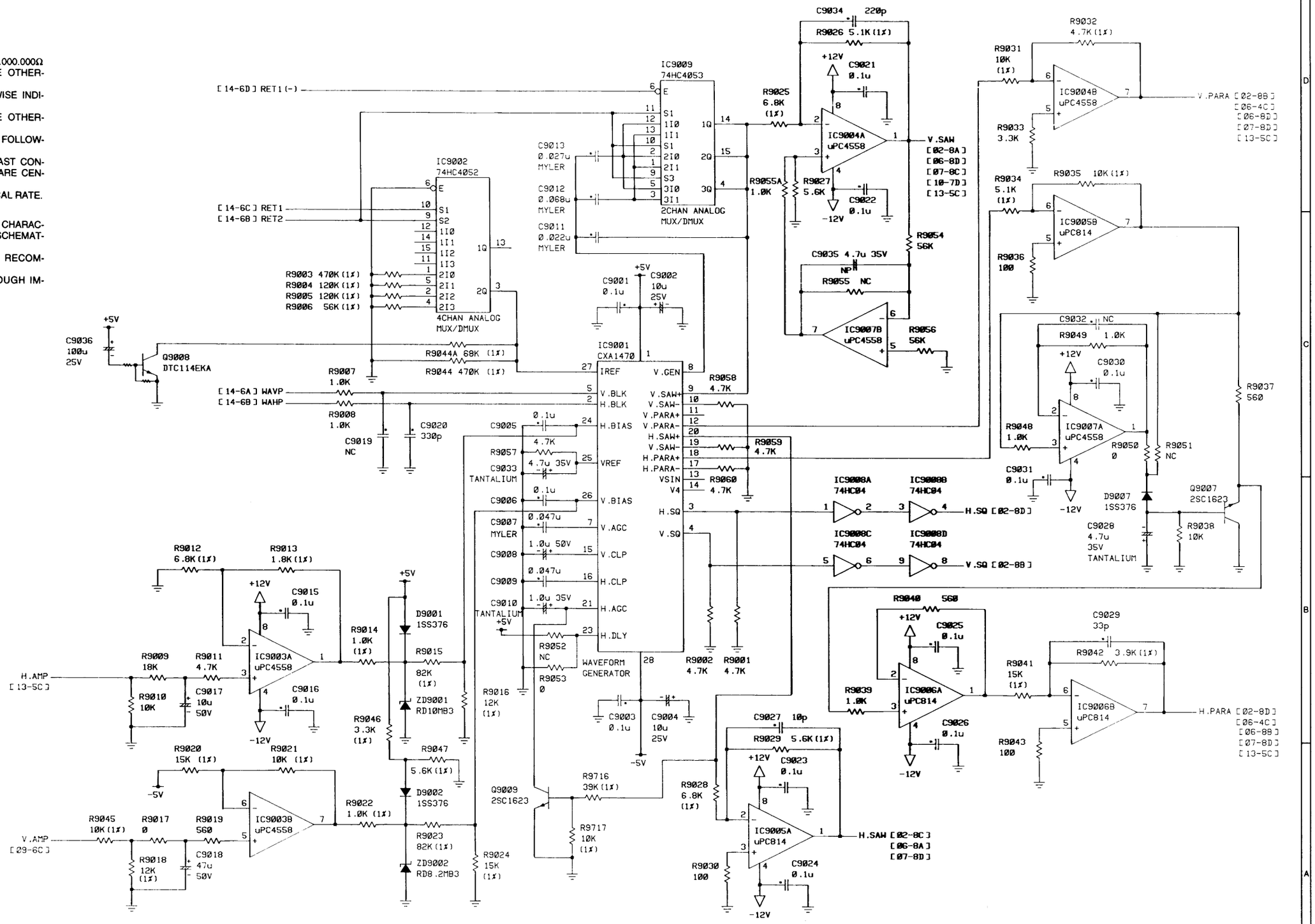

WAVE PWB (PWC-4193) (2/15)

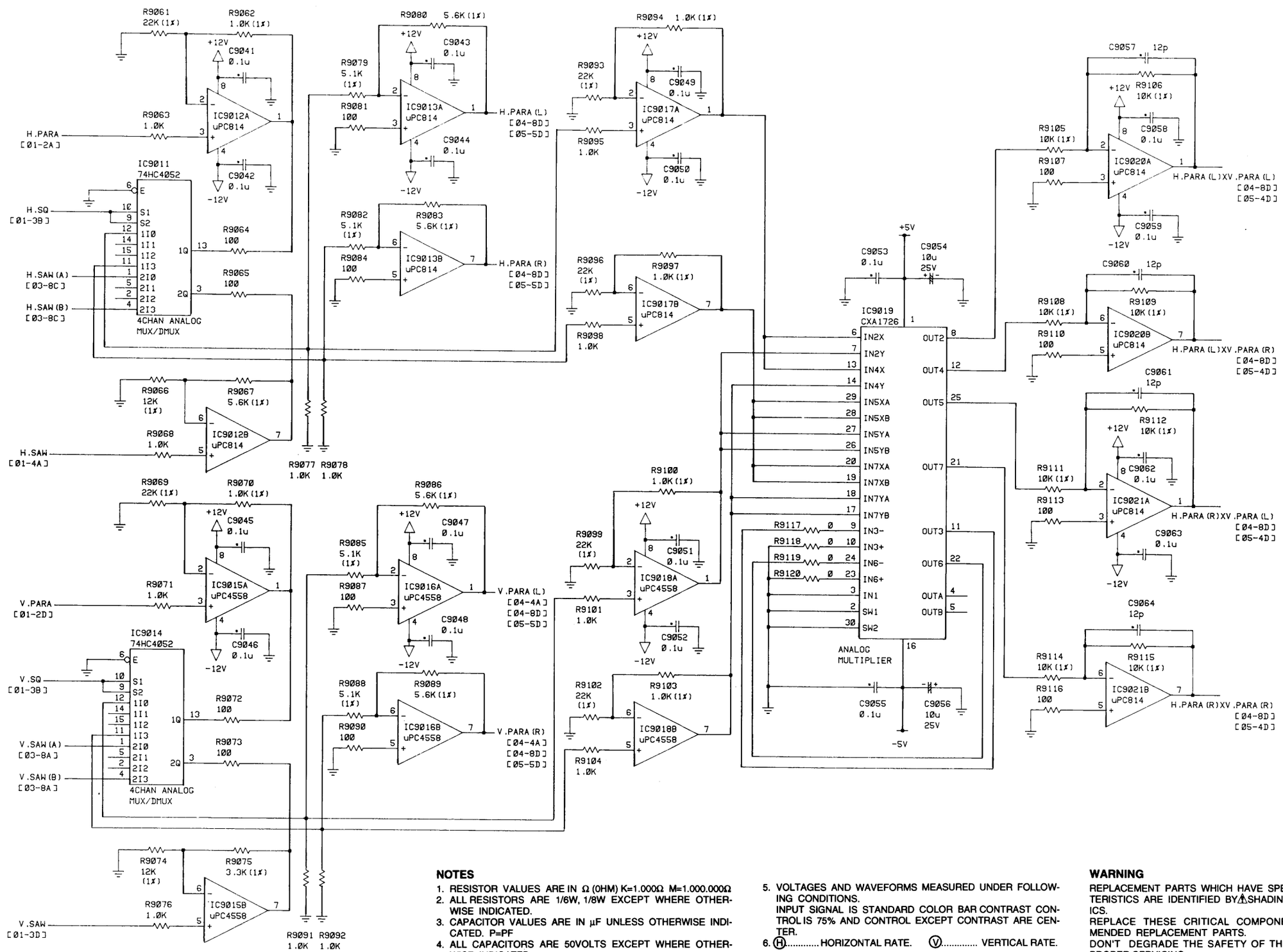

NOTES

1. RESISTOR VALUES ARE IN Ω (OHM) K=1.000Ω M=1.000.000Ω
2. ALL RESISTORS ARE 1/6W, 1/8W EXCEPT WHERE OTHERWISE INDICATED.
3. CAPACITOR VALUES ARE IN μF UNLESS OTHERWISE INDICATED. P=PF
4. ALL CAPACITORS ARE 50VOLTS EXCEPT WHERE OTHERWISE INDICATED.
5. VOLTAGES AND WAVEFORMS MEASURED UNDER FOLLOWING CONDITIONS.
   INPUT SIGNAL IS STANDARD COLOR BAR CONTRAST CONTROL IS 75% AND CONTROL EXCEPT CONTRAST ARE CENTER.
6. Ⓗ..... HORIZONTAL RATE. Ⓥ..... VERTICAL RATE.

WARNING

REPLACEMENT PARTS WHICH HAVE SPECIAL SAFTY CHARACTERISTICS ARE IDENTIFIED BY ⚠ SHADING ON THE SCHEMATICS.
REPLACE THESE CRITICAL COMPONENTS WITH RECOMMENDED REPLACEMENT PARTS.
DON'T DEGRADE THE SAFETY OF THE SET THROUGH IMPROPER SERVICING.

WAVE PWB (PWC-4193) (3/15)

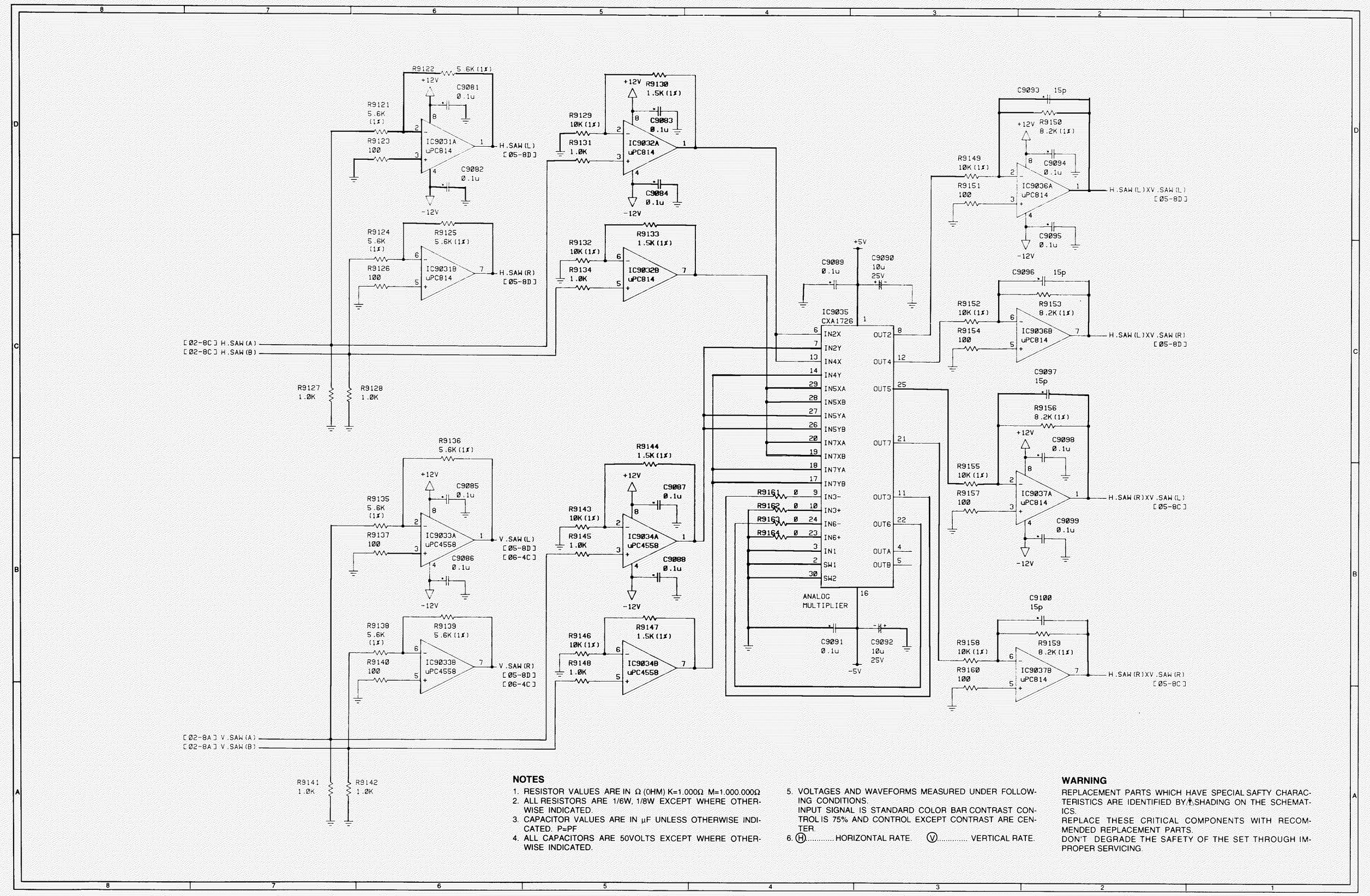

NOTES

1. RESISTOR VALUES ARE IN Ω (OHM) K=1.000Ω M=1.000.000Ω
2. ALL RESISTORS ARE 1/6W, 1/8W EXCEPT WHERE OTHERWISE INDICATED.
3. CAPACITOR VALUES ARE IN μF UNLESS OTHERWISE INDICATED. P=PF
4. ALL CAPACITORS ARE 50VOLTS EXCEPT WHERE OTHERWISE INDICATED.
5. VOLTAGES AND WAVEFORMS MEASURED UNDER FOLLOWING CONDITIONS.
   INPUT SIGNAL IS STANDARD COLOR BAR CONTRAST CONTROL IS 75% AND CONTROL EXCEPT CONTRAST ARE CENTER.
6. Ⓗ.....HORIZONTAL RATE. Ⓥ..... VERTICAL RATE.

WARNING

REPLACEMENT PARTS WHICH HAVE SPECIAL SAFTY CHARACTERISTICS ARE IDENTIFIED BY ⚠ SHADING ON THE SCHEMATICS.
REPLACE THESE CRITICAL COMPONENTS WITH RECOMMENDED REPLACEMENT PARTS.
DON'T DEGRADE THE SAFETY OF THE SET THROUGH IMPROPER SERVICING.

WAVE PWB (PWC-4193) (4/15)

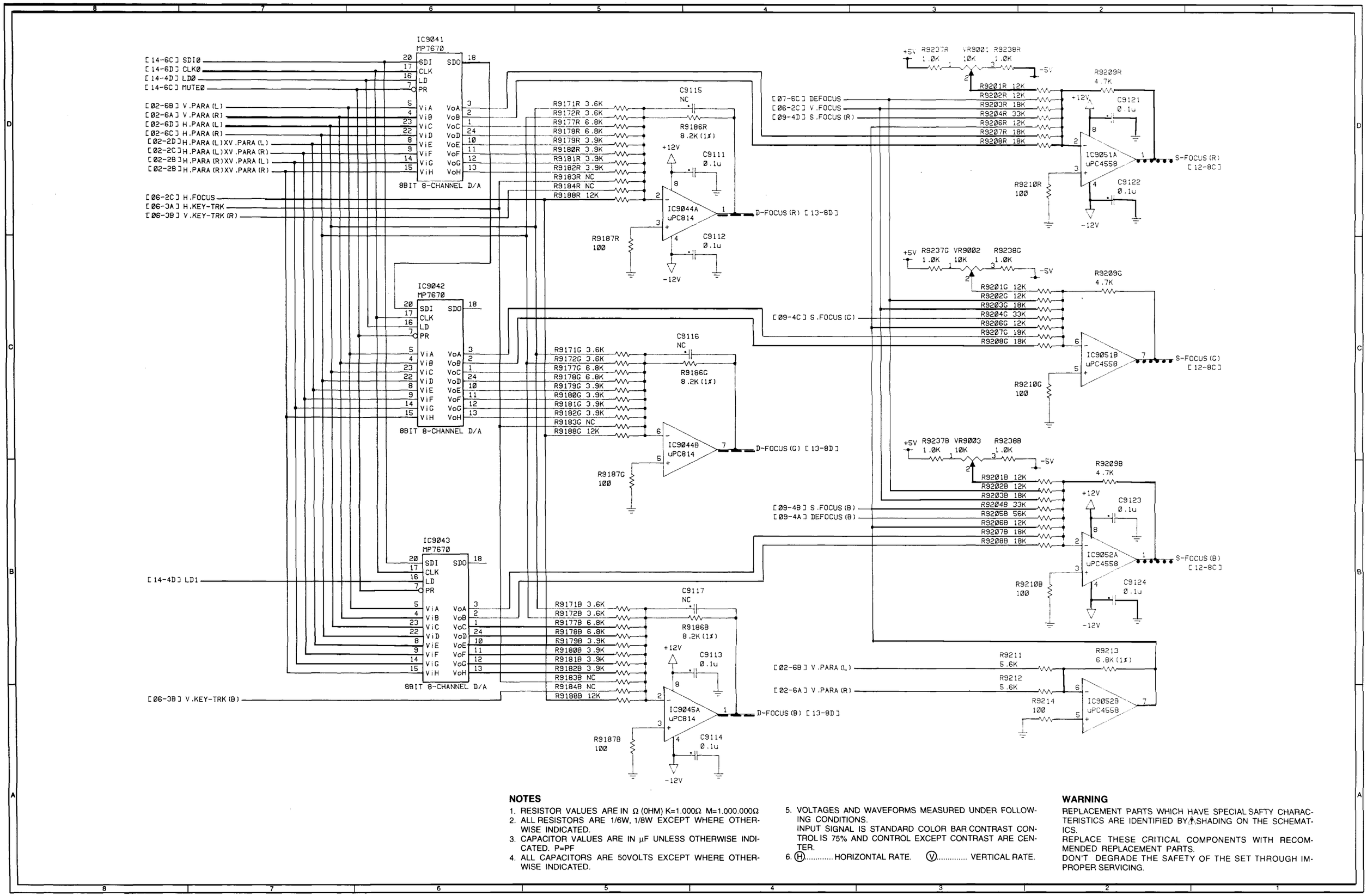

NOTES

1. RESISTOR VALUES ARE IN Ω (OHM) K=1.000Ω M=1.000.000Ω
2. ALL RESISTORS ARE 1/6W, 1/8W EXCEPT WHERE OTHERWISE INDICATED.
3. CAPACITOR VALUES ARE IN μF UNLESS OTHERWISE INDICATED. P=PF
4. ALL CAPACITORS ARE 50VOLTS EXCEPT WHERE OTHERWISE INDICATED.
5. VOLTAGES AND WAVEFORMS MEASURED UNDER FOLLOWING CONDITIONS.
   INPUT SIGNAL IS STANDARD COLOR BAR CONTRAST CONTROL IS 75% AND CONTROL EXCEPT CONTRAST ARE CENTER.
6. Ⓗ..... HORIZONTAL RATE. Ⓥ..... VERTICAL RATE.

WARNING

REPLACEMENT PARTS WHICH HAVE SPECIAL SAFTY CHARACTERISTICS ARE IDENTIFIED BY ⚠ SHADING ON THE SCHEMATICS.
REPLACE THESE CRITICAL COMPONENTS WITH RECOMMENDED REPLACEMENT PARTS.
DON'T DEGRADE THE SAFETY OF THE SET THROUGH IMPROPER SERVICING.

WAVE PWB (PWC-4193) (5/15)

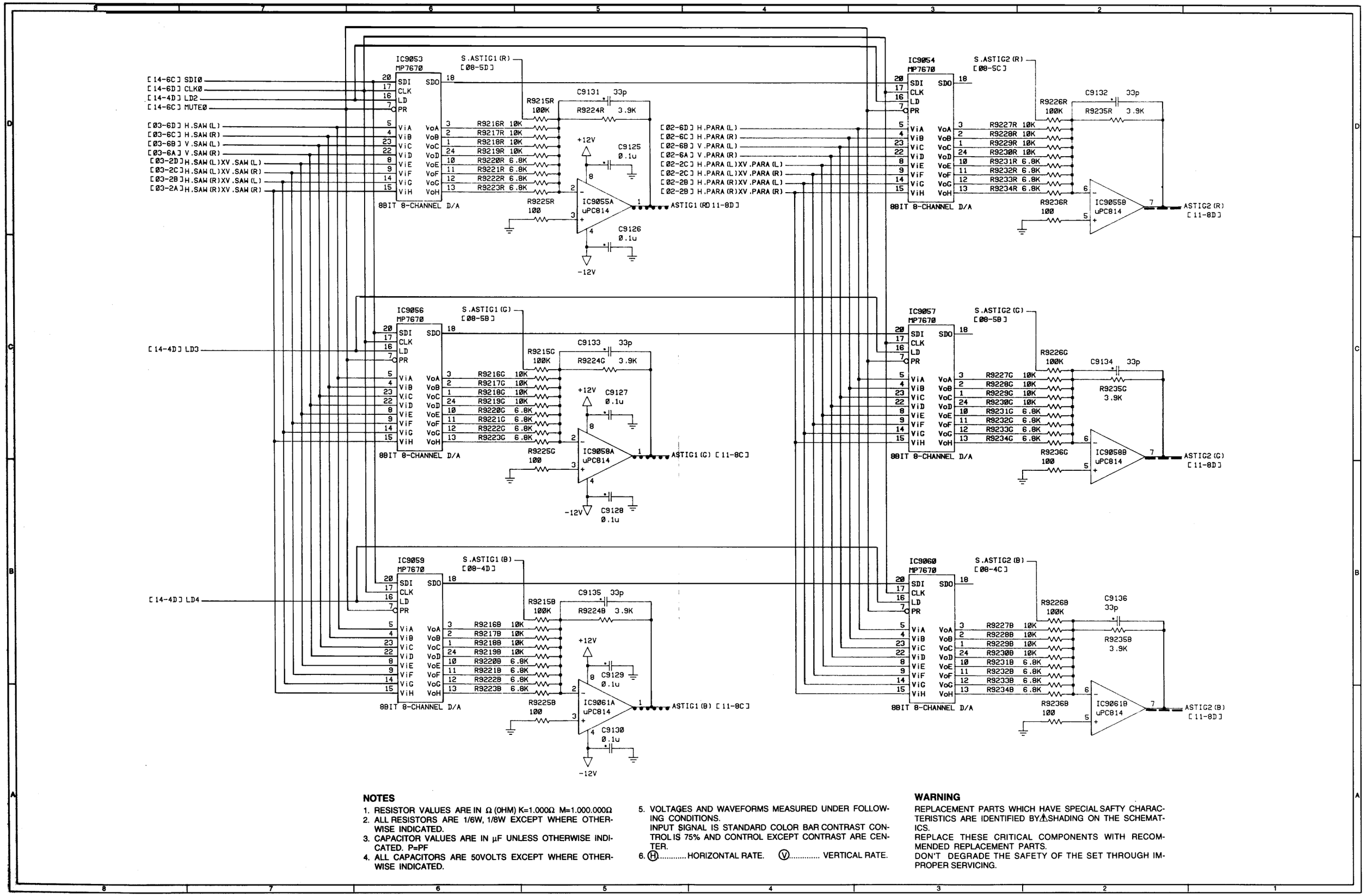

NOTES

1. RESISTOR VALUES ARE IN Ω (OHM) K=1.000Ω M=1.000.000Ω
2. ALL RESISTORS ARE 1/6W, 1/8W EXCEPT WHERE OTHERWISE INDICATED.
3. CAPACITOR VALUES ARE IN μF UNLESS OTHERWISE INDICATED. P=PF
4. ALL CAPACITORS ARE 50VOLTS EXCEPT WHERE OTHERWISE INDICATED.
5. VOLTAGES AND WAVEFORMS MEASURED UNDER FOLLOWING CONDITIONS.
   INPUT SIGNAL IS STANDARD COLOR BAR CONTRAST CONTROL IS 75% AND CONTROL EXCEPT CONTRAST ARE CENTER.
6. Ⓗ..... HORIZONTAL RATE. Ⓥ..... VERTICAL RATE.

WARNING

REPLACEMENT PARTS WHICH HAVE SPECIAL SAFTY CHARACTERISTICS ARE IDENTIFIED BY ⚠ SHADING ON THE SCHEMATICS.
REPLACE THESE CRITICAL COMPONENTS WITH RECOMMENDED REPLACEMENT PARTS.
DON'T DEGRADE THE SAFETY OF THE SET THROUGH IMPROPER SERVICING.

WAVE PWB (PWC-4193) (6/15)

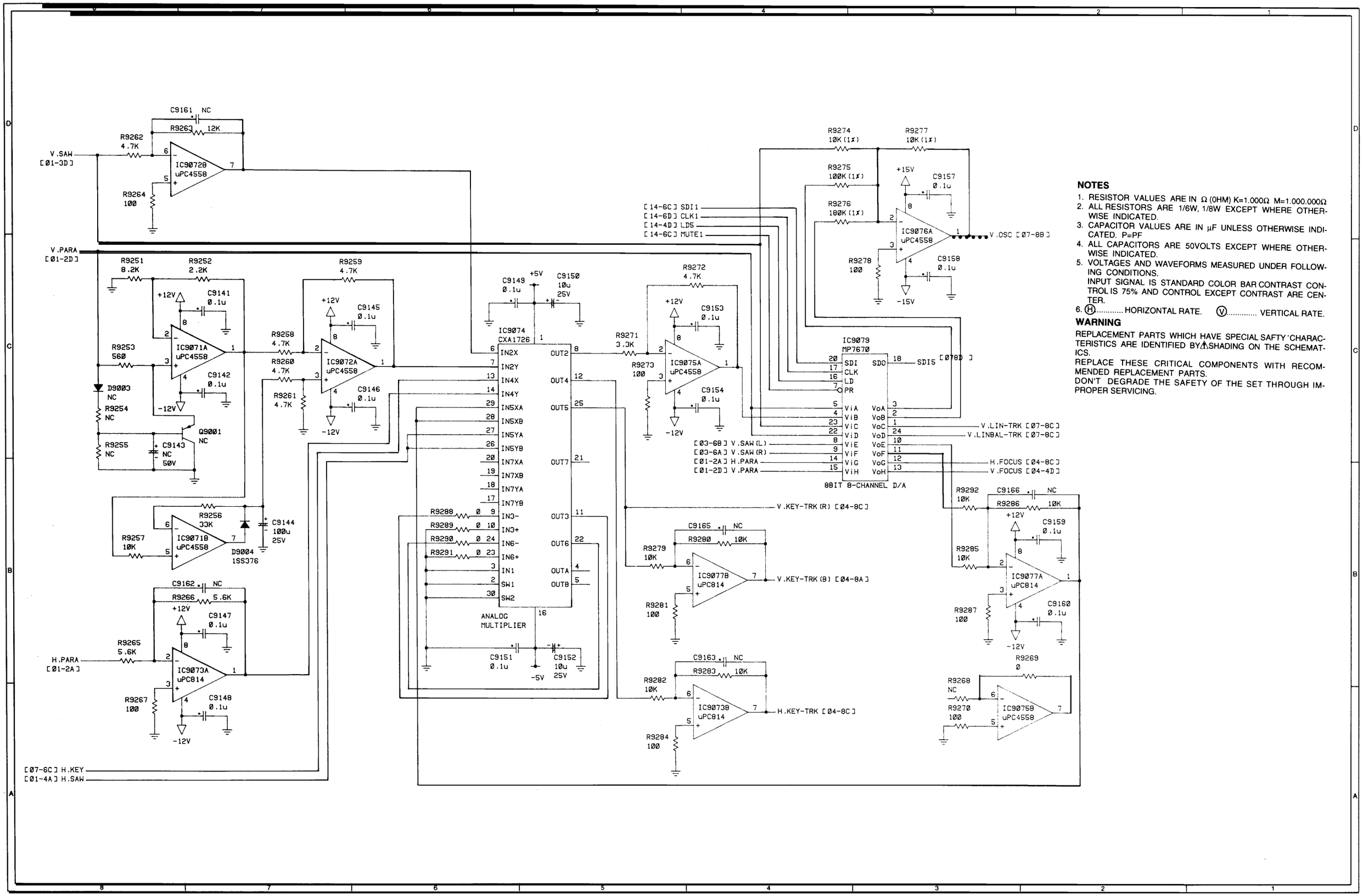

NOTES

1. RESISTOR VALUES ARE IN Ω (OHM) K=1.000Ω M=1.000.000Ω
2. ALL RESISTORS ARE 1/6W, 1/8W EXCEPT WHERE OTHERWISE INDICATED.
3. CAPACITOR VALUES ARE IN μF UNLESS OTHERWISE INDICATED. P=PF
4. ALL CAPACITORS ARE 50VOLTS EXCEPT WHERE OTHERWISE INDICATED.
5. VOLTAGES AND WAVEFORMS MEASURED UNDER FOLLOWING CONDITIONS.
   INPUT SIGNAL IS STANDARD COLOR BAR CONTRAST CONTROL IS 75% AND CONTROL EXCEPT CONTRAST ARE CENTER.
6. Ⓗ..... HORIZONTAL RATE. Ⓥ..... VERTICAL RATE.

WARNING

REPLACEMENT PARTS WHICH HAVE SPECIAL SAFTY CHARACTERISTICS ARE IDENTIFIED BY ⚠ SHADING ON THE SCHEMATICS.
REPLACE THESE CRITICAL COMPONENTS WITH RECOMMENDED REPLACEMENT PARTS.
DON'T DEGRADE THE SAFETY OF THE SET THROUGH IMPROPER SERVICING.

WAVE PWB (PWC-4193) (7/15)

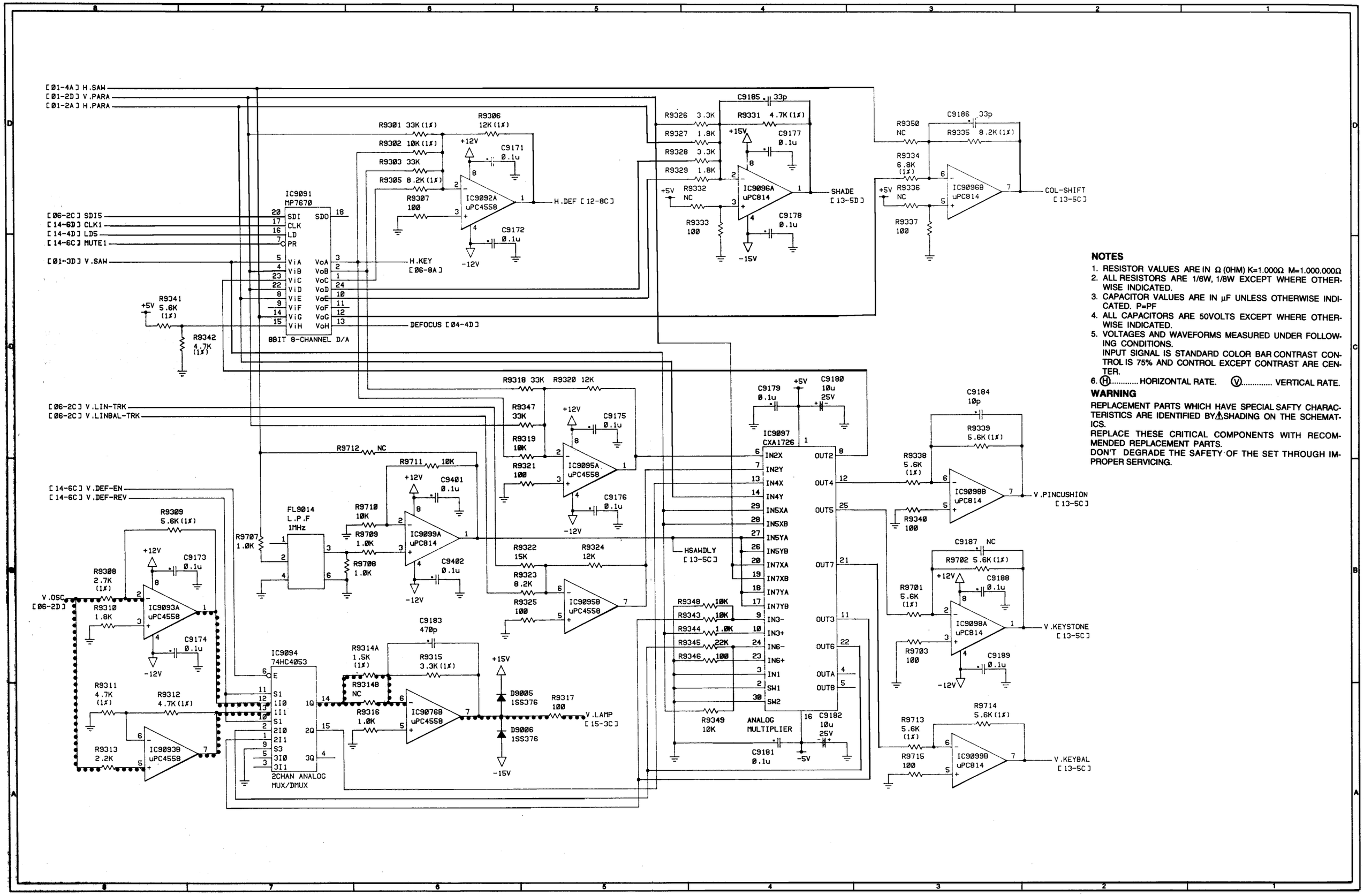

NOTES

1. RESISTOR VALUES ARE IN Ω (OHM) K=1.000Ω M=1.000.000Ω
2. ALL RESISTORS ARE 1/6W, 1/8W EXCEPT WHERE OTHERWISE INDICATED.
3. CAPACITOR VALUES ARE IN μF UNLESS OTHERWISE INDICATED. P=PF
4. ALL CAPACITORS ARE 50VOLTS EXCEPT WHERE OTHERWISE INDICATED.
5. VOLTAGES AND WAVEFORMS MEASURED UNDER FOLLOWING CONDITIONS.
   INPUT SIGNAL IS STANDARD COLOR BAR CONTRAST CONTROL IS 75% AND CONTROL EXCEPT CONTRAST ARE CENTER.
6. Ⓗ..... HORIZONTAL RATE. Ⓥ..... VERTICAL RATE.

WARNING

REPLACEMENT PARTS WHICH HAVE SPECIAL SAFTY CHARACTERISTICS ARE IDENTIFIED BY ⚠ SHADING ON THE SCHEMATICS.
REPLACE THESE CRITICAL COMPONENTS WITH RECOMMENDED REPLACEMENT PARTS.
DON'T DEGRADE THE SAFETY OF THE SET THROUGH IMPROPER SERVICING.

WAVE PWB (PWC-4193) (8/15)

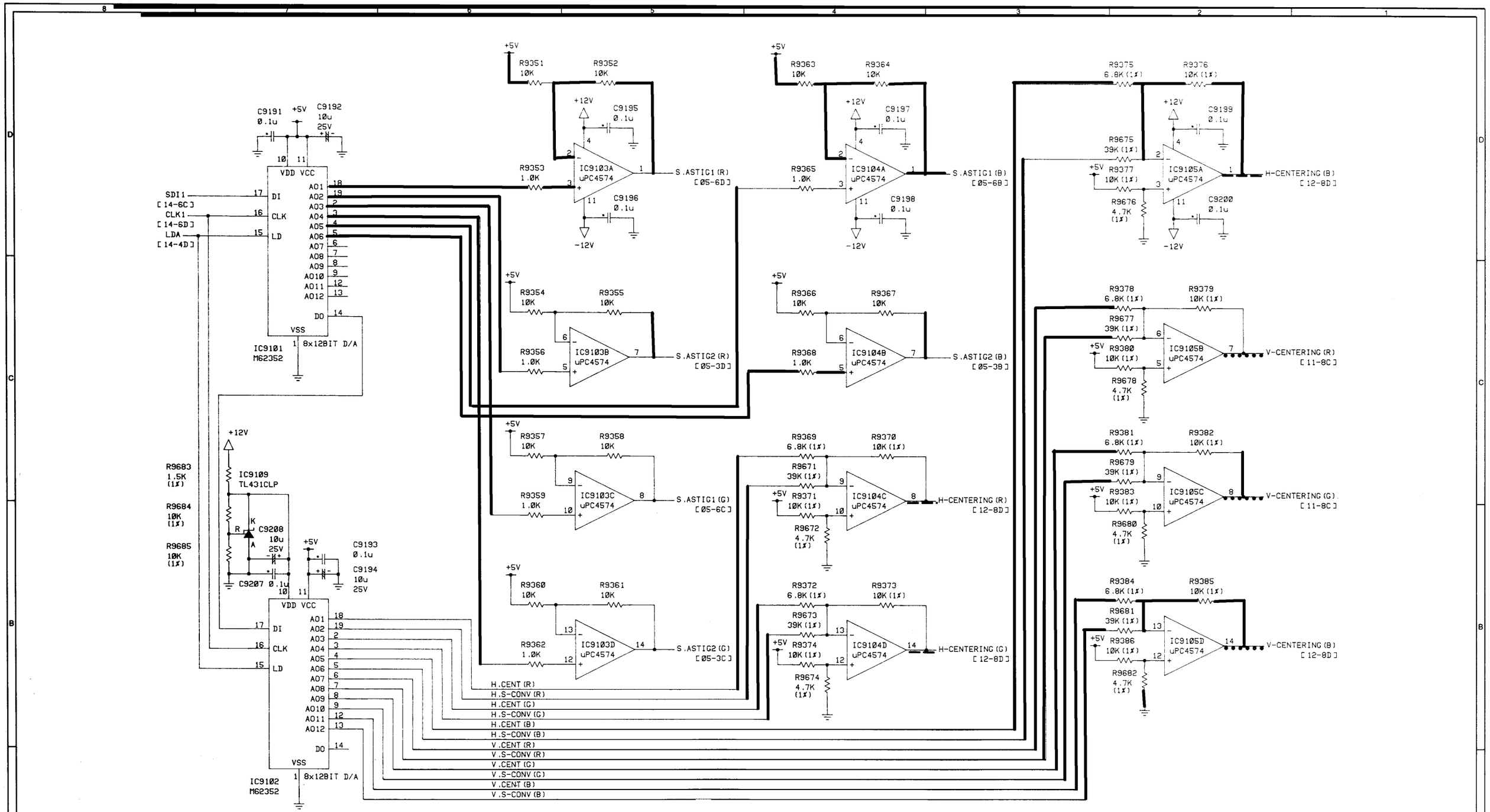

NOTES

1. RESISTOR VALUES ARE IN Ω (OHM) K=1.000Ω M=1.000.000Ω
2. ALL RESISTORS ARE 1/6W, 1/8W EXCEPT WHERE OTHERWISE INDICATED.
3. CAPACITOR VALUES ARE IN μF UNLESS OTHERWISE INDICATED. P=PF
4. ALL CAPACITORS ARE 50VOLTS EXCEPT WHERE OTHERWISE INDICATED.
5. VOLTAGES AND WAVEFORMS MEASURED UNDER FOLLOWING CONDITIONS.
   INPUT SIGNAL IS STANDARD COLOR BAR CONTRAST CONTROL IS 75% AND CONTROL EXCEPT CONTRAST ARE CENTER.
6. Ⓗ..... HORIZONTAL RATE. Ⓥ..... VERTICAL RATE.

WARNING

REPLACEMENT PARTS WHICH HAVE SPECIAL SAFTY CHARACTERISTICS ARE IDENTIFIED BY ⚠ SHADING ON THE SCHEMATICS.
REPLACE THESE CRITICAL COMPONENTS WITH RECOMMENDED REPLACEMENT PARTS.
DON'T DEGRADE THE SAFETY OF THE SET THROUGH IMPROPER SERVICING.